ELEMENT 4

GAS FIRES

INSTALLATION MANUAL

SUMMUM 70

Do not use this product as a primary heat source

TABLE OF CONTENTS

1 CE STATEMENT 4

2 IMPORTANT SAFETY INFORMATION 4

3 WARRANTY 5

4 REMOTE CONTROL WITH FULL ELECTRONIC IGNITION 6

4.1 ADJUSTING THE COMMUNICATION CODE 6

4.2 IGNITING THE PILOT LIGHT 6

4.3 IGNITING THE MAIN BURNER 6

4.4 SWITCHING OFF THE FIREPLACE 6

5 INSTALLATION PREPARATION AND - INSTRUCTION 7

5.1 RELEVANT NORMS AND GUIDELINES 7

5.2 ATTENTION POINTS GAS FIREPLACE 7

5.3 APPLIANCE INSTALLATION 7

5.4 ATTENTION POINTS GAS CONNECTION 7

5.5 REQUIREMENTS FLUE AND WALL TERMINALS 7

5.6 BASEMENTS, LIGHT WELLS AND RETAINING WALLS 7

6 FIRE SAFE INSTALLATION 8

6.1 FIRE SAFETY DEVICE SET-UP 8

6.1.1 PROTECTION OF WALL AND CEILING 8

6.2 ASSEMBLY REGULATIONS 8

6.2.1 GENERAL ASSEMBLY REGULATIONS 8

6.2.2 ASSEMBLY REGULATIONS FOR NON-FLAMMABLE MATERIALS 8

6.2.3 ASSEMBLY REGULATIONS WITH FLAMMABLE MATERIALS 8

6.3 OTHER RULES REGARDING HEAT IN YOUR INSTALLATION 10

6.3.1 RADIATION 10

6.3.2 CONVECTION 10

6.3.3 ELECTRICAL PIPES 10

6.3.4 OUTDOOR INSTALLATION 10

7 ATTENTION POINTS FLUE GAS EXTRACTION 11

7.1 DETERMINING THE MAXIMUM FLUE GAS EXTRACTION LENGTH 11

7.1.1 REFERENCE THE FLUE CALCULATION 11

7.2 BENDS 11

7.2.1 CALCULATE FLUE LENGTH 12

7.3 POWER-FAN 12

7.4 INSTALLATION OF FLUE MATERIAL 12

8 ELECTRICAL CIRCUIT 13

8.1 DOMOTICA 13

8.2 ELEMENT4 PROCONTROL APP. 13

8.3 EXPLANATION OF THE ADDITIONAL MODULES 14

8.3.1 OPERATION OF THE LED MODULE 14

9 MAINTENANCE INSTRUCTION . . . 15
9.1 MAINTENANCE IN THE COMBUSTION CHAMBER . . . 15
9.1.1 (DIS)ASSEMBLY OF THE TRIMS . . . 15
9.1.2 REMOVE GLASS . . . 15
9.2 CLEANING THE GLASS . . . 15
9.3 SERVICING THE BURNER . . . 17
9.3.1 BURNERS . . . 17
9.3.2 PILOT . . . 17
9.3.3 THERMOCOUPLES . . . 17
10 DECORATIVE (CERAMIC) PARTS . . . 18
10.1 DECORATION ARRANGEMENT . . . 18
10.1.1 CLEANING THE CERAMICS . . . 18
11 OPERATING THE FIREPLACE . . . 19
11.1 BEFORE THE FIRST FIRE . . . 19
11.2 THE FIRST FIRE . . . 19
11.3 SENSORY CHECKS . . . 19
11.3.1 VISUAL CHECKS . . . 19
11.3.2 SMELL CHECK . . . 19
11.3.3 SOUND CHECK . . . 19
A TROUBLESHOOTER . . . 20
A.A FIRST AID FOR MALFUNCTION . . . 20
A.B NECESSARY TOOLS . . . 24
B ERRORS CODES PROCONTROL APP . . . 25
B.A MESSAGES SHOWN IN APP . . . 25
B.B MESSAGES SHOWN IN REMOTE . . . 26
C FAULTS AND ERROR CODES IN THE REMOTE . . . 27
C.A F41 ERROR . . . 27
C.B ROUTER INFORMATION . . . 27
C.B.A MINIMUM REQUIREMENT . . . 27
C.B.B WI-FI ROUTER . . . 27
C.B.C JAMMERS . . . 27
C.B.D FREQUENCY . . . 27
D TERMINAL LOCATION . . . 28
D.A TERMINAL LOCATION WITH VERTICAL EXHAUST (C11) . . . 28
D.B TERMINAL LOCATION WITH HORIZONTAL EXHAUST (C31) . . . 28
E CALCULATION TABLES FLUEGAS RESTRICTION . . . 29
E.A HORIZONTAL TERMINAL FLUE DIAMETER 200/130 . . . 29
E.B VERTICAL TERMINAL FLUE DIAMETER 200/130 . . . 29
E.C REDUCTION TO FLUE DIAMETER 150/100 . . . 29
F TECHNICAL DATA . . . 30
G ECODESIGN . . . 31
G.A ECOLABELS . . . 31
H DIMENSIONAL DRAWINGS . . . 32

1 CE STATEMENT

We hereby declare that the design and construction of the Element4 gas appliances are complying to the essential demands and regulations for gas products.

Product:

- Gas fireplace, local spaceheater

Model:

E4-09

- Summum 70 F
- Summum 70 CL
- Summum 70 CR
- Summum 70 3S

Applicable EG-guidelines:

- (EU) 2016/426 (GAR)

Applicable harmonized norms:

- NEN-EN-613
- NEN-EN-613/A1

This declaration loses its validity when changes to the device are made without the written permission by Element4. You can ask for a copy of the test certificates of all models via our general e-mail adress, which is found on the back of this manual.

J. Kempers

CEO

2 IMPORTANT SAFETY INFORMATION

Please take into account the following things for a safe installation of your fireplace!

- The fireplace may only be installed by a qualified installer/dealer, following these installation instructions. We advise you to read these instructions properly, before commencing the installation of your device.
- Before installation check the decive for transport damage and inform your supplier immediatly if damage is found.
- Check the data on the data plate. The gas type and pressure should check out with those locally available. The data plate is mounted to the device. Make sure it is accessible at all times.
- This device may not be used a primary heat source!
- This device is designed to be used with natural gas or LPG. The device can only be used with the type of gas specified on the data plate at the time of purchase.
- The device may never be used when glass is broken or damaged. The flue gasses can get into the installation room. The settings and construction of the device must not be changed!
- Parts are only to be changed with original parts by the original manufacturer.
- The device is provided with a special set of decorative materials. Do not place any extra imitation logs or decoration material on the burner or in the combustion chamber. See **CHAPTER 10** for an instruction on how to arrange the decoration properly.
- The glass and frame on this appliance acts as a fireguard conforming to BS: 1945 – 1971 and satisfies the Heating Appliance (Fireguards) regulations 1991.
- No part of the window or frame should be permanently removed. It does not give protection for young children aged or infirm, extra guarding (conforming to BS8423: 2002) should be considered so the special hazards that exist in nurseries and other places where there are young children, aged or infirm persons are minimized.
- The heat that is coming from the device may effect the materials in its surroundings. Always take into account to correct safety distances. For more information see **CHAPTER 6.**

3 WARRANTY

NB: Should a problem occur, that you are not able to fix yourself with the help off the support in APPENDIX A to C, **please** contact you installer or dealer.

The Element4 devices on which this warranty is applicable are made of high quality materials. Should any problem or defects still occur the following provision are in effect;

1. Before any installation, the installer will ensure himself of the good quality and operation of the flue channel. The gas fireplaces are to be installed by a competent installer, according to the rules and regulations that are applicable in the country (or even region) of installation and those as described in this manual.
2. There is a warranty period of two years for all Element4 devices, starting from the moment of purchase. The date of purchase should be mentioned clearly on the purchase invoice.
3. The ceramic glass is not included in the warranty, as are the physical or chemical outside influences during transport, storage or montage.
4. If a malfunction should occur during warranty period that is a consequence of a assembly error or material defect, Element4 will provide a free replacement part to the installer, without compensation for disassembly or montage.
5. In case the installer is not able to fix the problem himself, a request can be made to Element4 to do it for him, as long as the service can be done within the borders of the Benelux.
6. Only after consulation up front, the device or loose parts can be send for check up or replacement. These goods are the be send with the necessary warranty documents and the date of purchase.
7. When a house visit should occur for service purposes by Element4 (within the borders of the Benelux) during warranty period, the right documentation (i.e this page and a proof of purchase) should be available.

For a service provision to house, outside the warranty period, the following costs ar ebeing charged:

Materialcosts
- Working hourse
- Call-out costs

The warranty is not applicable in the following cases:

1. When one of the previous point is not met
2. When changes are made, of which Element4 is not made aware of / has approved of upfront
3. When device is not installed and/or used properly according to the installation manual.
4. When other then the prescribed decoration material is used.
5. When the device is installed (partially or fully) with other materials than prescribed in this manual.

4 REMOTE CONTROL WITH FULL ELECTRONIC IGNITION

The unit is operated using a remote control (Figure 4.1) or the Element4 Puck, connected to a receiver (Figure 4.2).

The receiver is powered by 4 pen lite (type AA) batteries or a 6V adapter; 2 penlight batteries (type AAA) are used for the remote control. The life of the batteries is about a year with normal use.

4.1 ADJUSTING THE COMMUNICATION CODE

Before using the appliance, a communication code must be set between the remote control and the receiver. The code is chosen at random from the 65000 available codes. Therefore there is a slim chance that other remotes in your area use the same code.

Please do the following

Press the reset button on the receiver until you hear two beeps. After the second longer signal, let go of the reset button (Figure 4.2).

Within 20 seconds, press the down arrow on the remote control until you hear a sound signal. This is confirmation of the proper communication.

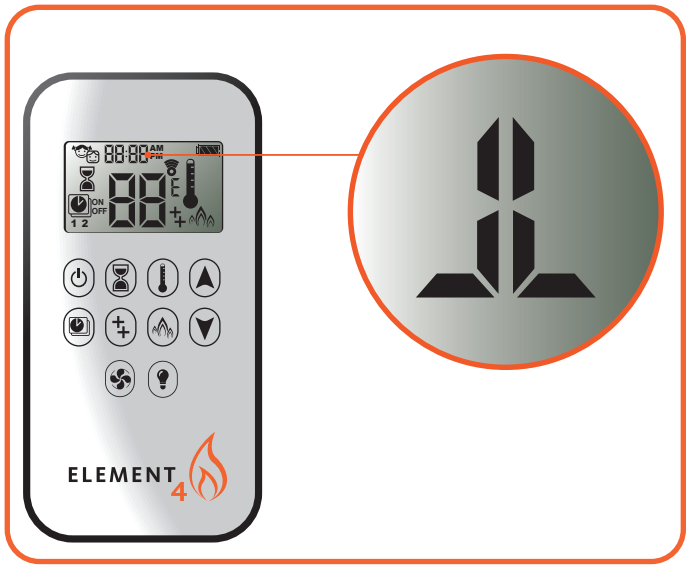

Figure 4.1 | Remote and ignition sign

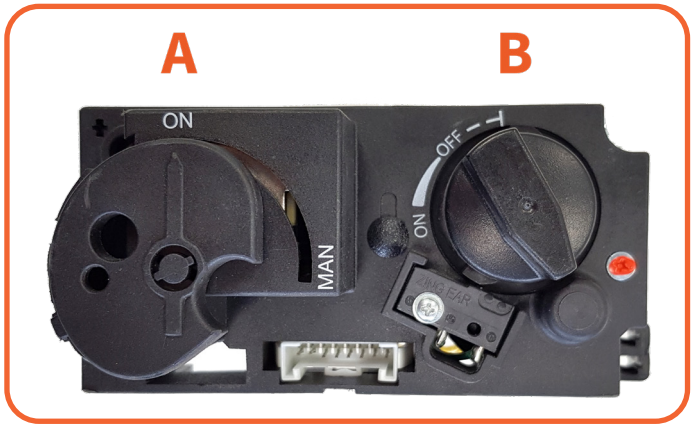

Figure 4.3 | Gas Block

4.2 IGNITING THE PILOT LIGHT

Check that the control knob (A) is in the ON position(Figure 4.3). Press the button on/off button of your remote control and continue to hold down (3 to 5 sec.) until you hear two short beepes.

The ignition sign will appear at the top of the screen (Figure 4.1) Now release the button. The ignitionprocedure is started.

NB: If the pilot light doesn't remain lit after 3 attempts you must turn off the gas tap and warn your installer.

4.3 IGNITING THE MAIN BURNER

After starting the pilot, knob B will automatically rotate counter clockwise and the main burner will start burning (Fig 4.3). Always wait 5 minutes after killing the pilot light before you start the pilot flame again.

NB: The pilot light must ignite the main burner, evenly and without a thud, if it does thud, close the gas tap and warn your installer.

4.4 SWITCHING OFF THE FIREPLACE

You switch off the fireplace by pressing the on/off button, this also turns off the pilot light! For a detailed description of the E-save remote control, please refer to the E-save manual which is included with the fireplace.

Figure 4.2 | Top and side view of the Receiver

5 INSTALLATION PREPARATION AND - INSTRUCTION

The device is developed, tested and approved conform the applicable standards for the usage, the performance and safety of the product. The installation of your device must apply to the current building prescriptions. We advise to make use of a qualified gas installer for the installation of your device. The installer can provide you with all information regarding the safety regulations of the installation.

5.1 RELEVANT NORMS AND GUIDELINES

The installation must be carried out in accordance with the following regulations

- Department of the Environment, the Building Standards (Scotland) (Consolidation) Regulations issued by the Scottish Development Department.
- BS 5440 part 1
- BS 5871 part 2
- BS 6891.

In the Republic of Ireland the installation must also conform to the relevant standards, particularly in regard to flue sizing and ventilation. Refer to documents;

- IS813
- ICP3
- IS327
- Any other rules in force.

This appliance must be installed in accordance with the rules in force and used only in a sufficiently ventilated space, and is intended for use on a gas installation with a governed meter.

5.2 ATTENTION POINTS GAS FIREPLACE

This appliance is a Balanced Flue room sealed appliance, and as such needs no additional ventilation. However an adequate supply of fresh air to maintain temperatures and a comfortable environment is recommended. This appliance may be installed in a completely sealed or mechanically ventilated house.

5.3 APPLIANCE INSTALLATION

- Determine the position required for the appliance.
- Create a gas connection for the appliance in approximately the correct location for the gas controls.
- The gas controls are connected to the burner of the appliance.
- This appliance must be securely fixed to the floor using the fixings built into the base of the appliance.
- Do not make any adjustments to the appliance.

5.4 ATTENTION POINTS GAS CONNECTION

The gas connection should apply to the local norms in force. Calculate the diamater of the gas flue, such that no pressure loss is occuring in the pipes. Place a shut-off valve in the near vicinity of the device. Position the gas connection, such that it is always accessible for service purposes.

The gas block and receiver are under the combustion chamber, in the deivce, so that it is always accessible for service purposes.

5.5 REQUIREMENTS FLUE AND WALL TERMINALS

The European CE-marking for the device is only applicable to the flue materials specified by the supplier. The device must be installed with the stainless steel flue material US by Metaloterm/On top. The usage of other concentric stainless steel material is only permitted when it has the same technical specification as the previous mentioned systems. Only when these materials are used a good and safe performance can be promised by Element4.

This appliance may be installed with a roof terminal (C31) or a wall terminal (C11).

This appliance may only be used with Balanced Flue (otherwise known as Concentric Flue) parts as specified by Element4. The Element4 specified flue parts have been approved with the appliance. If the appliance is installed on non-Element4 approved parts, Element4 cannot guarantee or accept and responsibility for the proper and safe working of the appliance.

The flue system must be constructed from the appliance upwards, with all joints being fully locked and sealed using the Element4 specified parts.

5.6 BASEMENTS, LIGHT WELLS AND RETAINING WALLS

Flue terminals should not be sited within the confines of a basement area, light well or external space formed by a retaining wall, unless steps are taken to ensure the products of combustion can disperse safely at all times. It may be possible to install this Balanced Flue system in such a location provided that it is not sited lower than 1m from the top level of that area to allow combustion products to disperse safely.

Flue terminals should be sited to ensure total clearance of the combustion products in accordance with the included information.

When the products of combustion are discharged, they should not cause a nuisance to adjoining or adjacent properties and they should be positioned so that damage cannot occur to other parts of the building. If the outer wall surface is constructed of combustible material, a non-combustible plate should be fitted behind the terminal projecting 25mm beyond the external edges of the terminal.

6 FIRE SAFE INSTALLATION

To install a gas fireplace as safely as possible, several installation preparations need to be made. This overview can be used to assure the fire safety of a conversion of a fireplace.

6.1 FIRE SAFETY DEVICE SET-UP

Install the device such that there are no flammable materials around the device or chimney. The device must never be placed against a back wall of flammable materials.

Flammable materials, such as wood, can combust at a temperature of 85°C. At high temperatures this can happen within several minutes (over 200°C) or at lower temperatures (more than 85°C) this may occur over a period of weeks.

A gas fireplace can achieve temperatures of over 200°C. Therefore one should use only non-flammable materials around the fireplace and in the cove.

It is important to follow the installation regulations below carefully. When the regulations are insufficiently- or not provided with the aspects of fire safety, the instructions according to NPR 3378-20:2010 are leading.

6.1.1 PROTECTION OF WALL AND CEILING

There are two kinds of walls/ceilings that can be distinguished, respectively;

Type 1 is the non-combustible category. Walls/ceilings in this group are made of mineral building materials (gas concrete, bricks, lime sandstone etcetera.) of more than 10cm thickness. For installations with these type of walls / ceiling please refer to **CHAPTER 6.2.2** for more regulations.

- Type 1 is the Combustibles category. Walls/ceilings that are made of – or contain flammable building materials, and all walls on which flammable objects (e.g. built-in furniture or wooden panels) are mounted on the side of the wall that is turned away from the fireplace. For these types of installations please refer to **CHAPTER 6.2.3**.

6.2 ASSEMBLY REGULATIONS

6.2.1 GENERAL ASSEMBLY REGULATIONS

- Load-bearing walls and ceilings must be covered in a protective fire resistant plate.
- Never use flammable materials around the fireplace or cove. The minimal distance between the device and non-flammable materials must be at 50 mm to ensure a convection air flow, also see **section 14.3.4**. The frames around the fireplace take into account this distance.
- Non-combustible materials may be installed to a zero clearance to the outer faces of the appliance outer frame face, given they not cover or prevent the removal of the glass panels or other parts of the fireplace that need to be removed during maintenance.
- The entire weight of the walls must be borne by a structure other than the fireplace.

6.2.2 ASSEMBLY REGULATIONS FOR NON-FLAMMABLE MATERIALS

(Figure 6.1 | and Figure 6.2 |)

- Make sure there is a good air ventilation in the cove. The temperature that leaves through the ventilation grilles must not be higher than 85°C. Therefore one should always make sure there are enough ventilation grilles in the upper and lower parts of the cove.

6.2.3 ASSEMBLY REGULATIONS WITH FLAMMABLE MATERIALS

For reference see Figure 6.3 | and Figure 6.4 | on the next page.

- Cover the walls/ceilings with a non-flammable, fire resistant plate, according to EN 13501-1:A2
- Place a non-flammable, fire resistant plate in front of the first one at a distance of 20mm or more.
- Make sure that the two plates are not attached to each other by screws or nails. Due to their conductivity these metals can cause a heat bridge throught which a fire may occur over time!

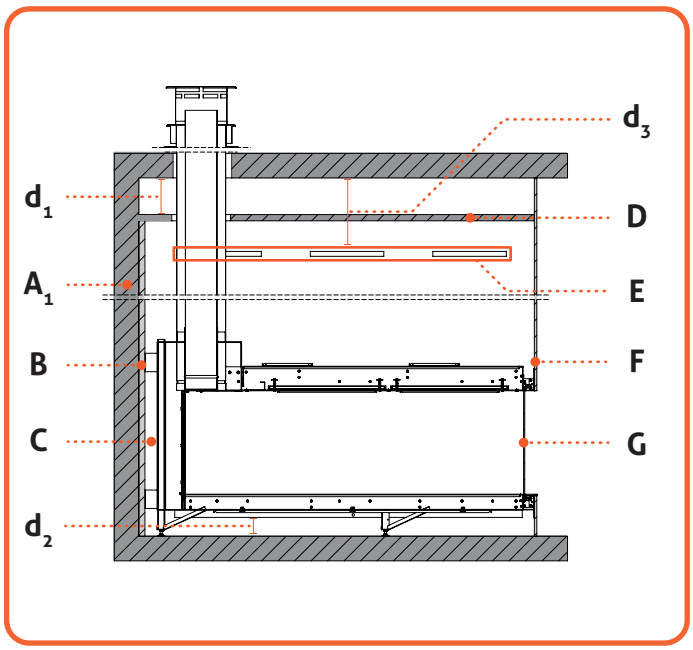

Figure 6.1 | C11: Flue situation Non-Flammable materials

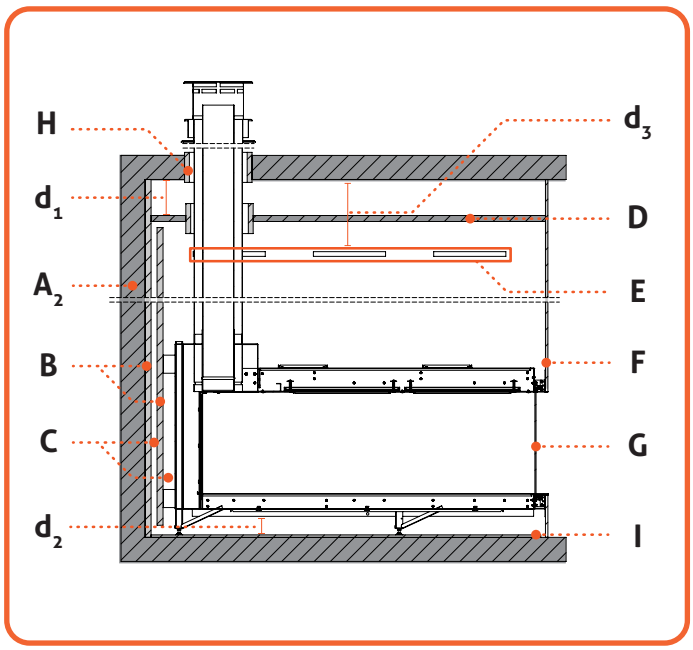

Figure 6.3 | C11: Flue situation Flammable materials

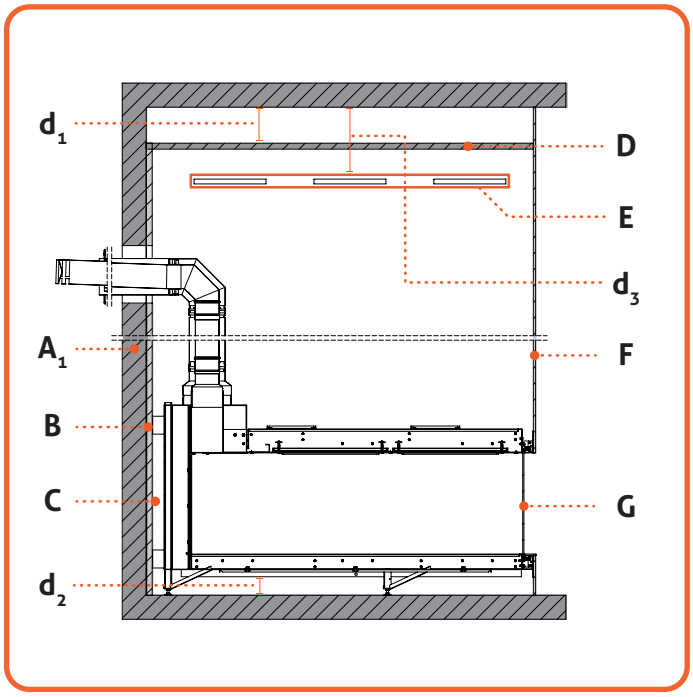

Figure 6.2 | C31: Flue situation Non-Flammable materials

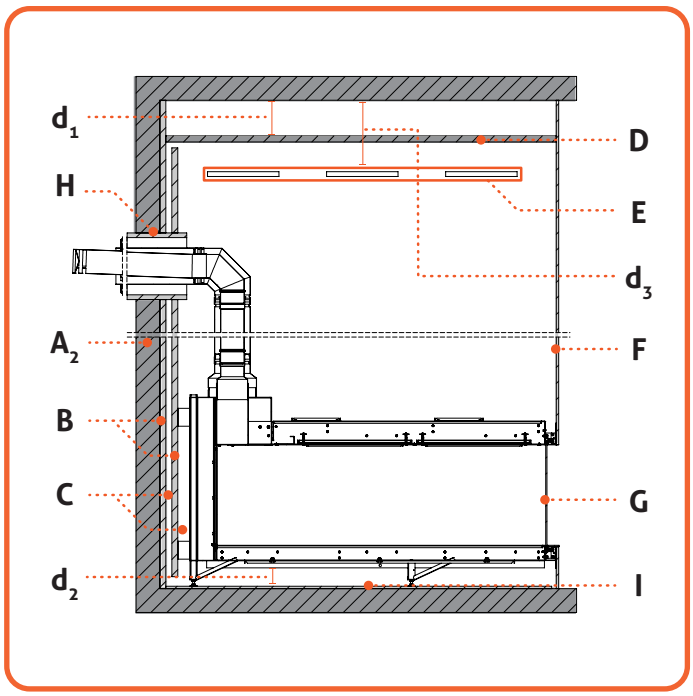

Figure 6.4 | C31: Flue situation Flammable materials

#	Description
A_1	Non-Combustible Wall
A_2	Combustible Wall
B	Fire resistant wall cover
C	Air pocket between fire resistant wall covers (≥20mm)
D	False ceiling
E	Convection openings (at least 2x150cm2)
F	Casing of non flammale material
G	Glass exterior of fireplace • **NB:** Radiation distance to flammable objects ≥400mm • Outside of the fireplace (~200°C)

H	Fire resistant flue pipe cover
I	Non-flammable protective floorboard
d_1	Distance ceiling to false ceiling (≥100mm)
d_2	Distance fireplace to non flammable floor (≥100mm)
d_3	Distance ceiling to convection openings (≥200mm)

Table 6.1 | Legenda

6.3 OTHER RULES REGARDING HEAT IN YOUR INSTALLATION

When igniting a fireplace three types of heat are emitted from it. These three types have different requirements to be taken into account.

6.3.1 RADIATION

Radiation is the pleasant warmth we all like when thinking about a fireplace.

When the fireplace is turned on, heat radiation will escape through the ceramic glass and metal exterior of the fireplace and will heat up the environment. Therefore it is important that

- A minimal distance between the ceramic glass and any flammable material in front of the fireplace is 40cm.

Floor protection

Between the device and the ground a minimal distance of 10cm is to be taken into account. The temperature of the floor under the device needs be less than 85°C and the floor of the conversion around the fireplace is to be constructed of non-flammable materials. If necessary the floor is to be covered with an insulation layer to protect it from unauthorized temperatures.

It is also allowed to position the fireplace on an elevated platform. The platform also needs to meet the requirements for a safe installation.

6.3.2 CONVECTION

The majority of the heat produced by Element4 fireplaces is quickly given of to the air around the fireplace. Convection is this transfer of heat through air.

Because most of the fireplace is installed inside of the construction of an enclosure, most of the air surrounding the fireplace warmed up, is located inside the enclosure.

Hot air will rise up in the enclosure (see Figure 6.5 |), also between the wall covers as in Figure 6.3 | and Figure 6.4 |. If nothing would be done, the hot air would expand up to the point that your enclosure will tear or break. Therefore several precautions need to be taken into account,

Hot air outlets / ventilation grills

To leave out the hot air at the top of the enclosure ventilation opening are necessary (Figure 6.5 |). The ventilation grills are to be placed at a minimal distance of 20cm from the ceiling and 30cm from any built-in furniture from the side, any flammable material or load-bearing concrete parts.

False ceiling

To avoid heat accumulation in the cove a non-flammable false ceiling may be placed above the grilles. The ventilation grilles need to be easy to clean at all times.

6.3.3 ELECTRICAL PIPES

The conversion has to be free of the usual electric installation pipes, if these are not protected against temperatures over 30°C by the necessary precautions. Special pipelines with an heightened heat resistance are permitted.

6.3.4 OUTDOOR INSTALLATION

This appliance is meant for indoor use. In the case that an Element4 appliance is to be installed as part of an indoor outdoor construction, or anywhere in direct contact with outdoor circumstances, a number of safety precautions are to be taken into account. For more information on an (semi-)outdoor installation of an Element4 product please contact your dealer.

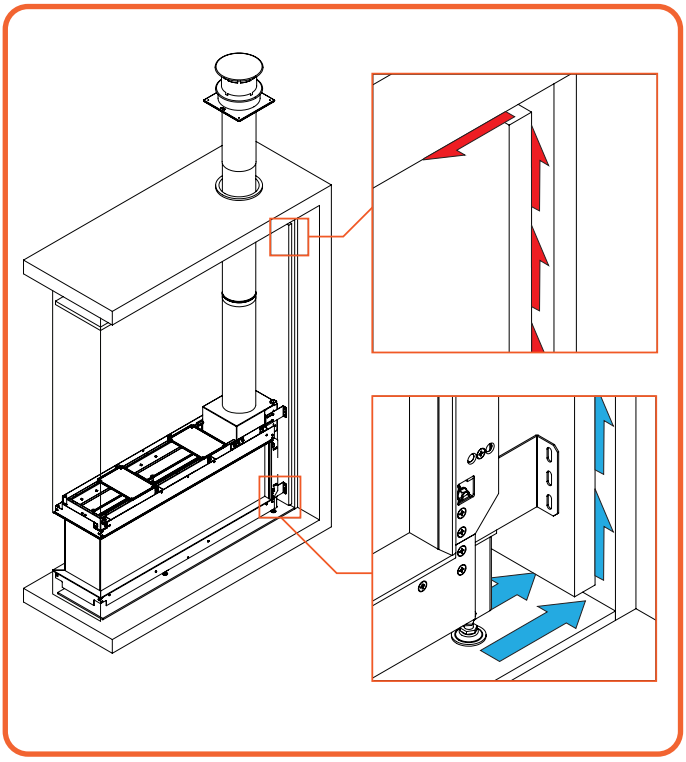

Figure 6.5 | Air flow between wall covers

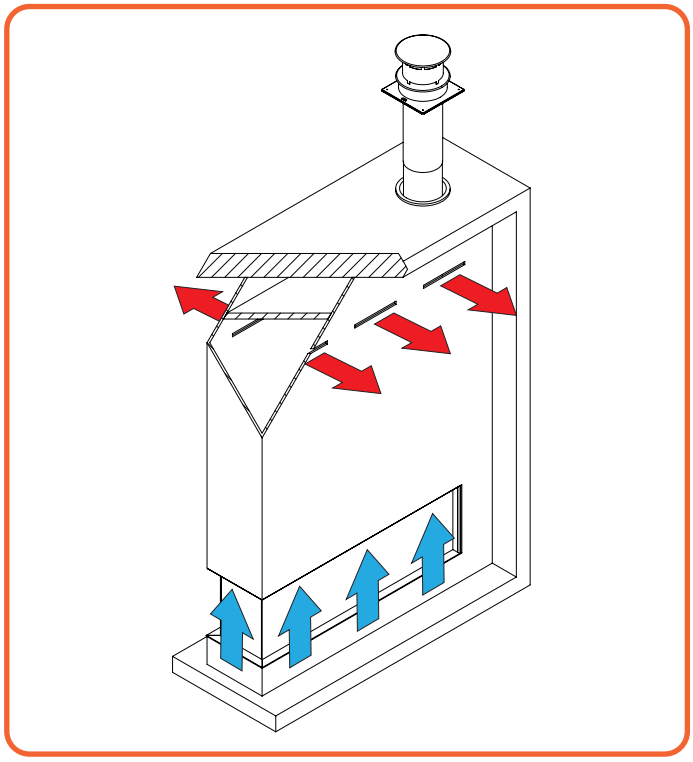

Figure 6.6 | Air vents

7 ATTENTION POINTS FLUE GAS EXTRACTION

To guarantee the fire safety regarding you flue gas configuration a casing is necessary. For this case non-combustible materials should be used. Make sure to ventilate a shaft and never to insulate it, to make sure the hot air is able to get away.

Every transit or terminal should be made such, that the warmth-insulation and non-combustability is guaranteed, according to the building regulation.

7.1 DETERMINING THE MAXIMUM FLUE GAS EXTRACTION LENGTH

The Summum 70 fireplaces have a flue diameter of 200/130. You always start with a vertical length of ½ meter. The maximum **total vertical section** is 22 meters. The flue can be reduced to 150/100 diameter according to the table in APPENDIX E.

Calculating the Total Vertical Section (TVS)

You calculate the Total Vertical Section by adding up all vertical upward sections in the extraction gradation.

Calculating the Total Horizontal Section (THS)

You calculate the Total Horizontal Section by adding up all horizontal parts in the extraction gradation.

7.1.1 REFERENCE THE FLUE CALCULATION

In order to ascertain whether your intended extraction shall function properly, a stove category is determined.

After you have determined the applicable category i.e. a wall or a roof terminal (see APPENDIX E), you search for the corresponding calculation tables.

Each category refers to a set of tables:

1. A table for horizontal outlet.
2. A table for vertical outlet
3. A table for reduction to 150/100

You must use the table applicable to you. You calculate your **total vertical section (TVS)** as well as your **total horizontal section (THS)**. In the table you will find advice; TVS on the vertical axis and THS on the horizontal axis.

7.2 BENDS

Be aware of the bends in your flue. They provide extra resistance in the system and must therefore be included in the TVS and THS.

There are 2 bend types as per the example in Figure 8.2:

- Type N bends: 45° and 90° bends from vertical to horizontal and vice versa.
- Type Q bends: 45° and 90° bends from horizontal to horizontal.

The first 3 type N bends (from vertical to horizontal) do not need to be included in your calculations. The next type N bends are each calculated as 1 horizontal meter in the THS.

For a type Q bend (horizontal to horizontal) the following applies:

- 90° bend in the horizontal section counts as 2 horizontal meters in the THS.
- 45° bend in the horizontal section counts as 1 horizontal meter in the THS

Extraction sections in a 45° upward pipe:

- 45° upward sections are calculated both vertically and horizontally.

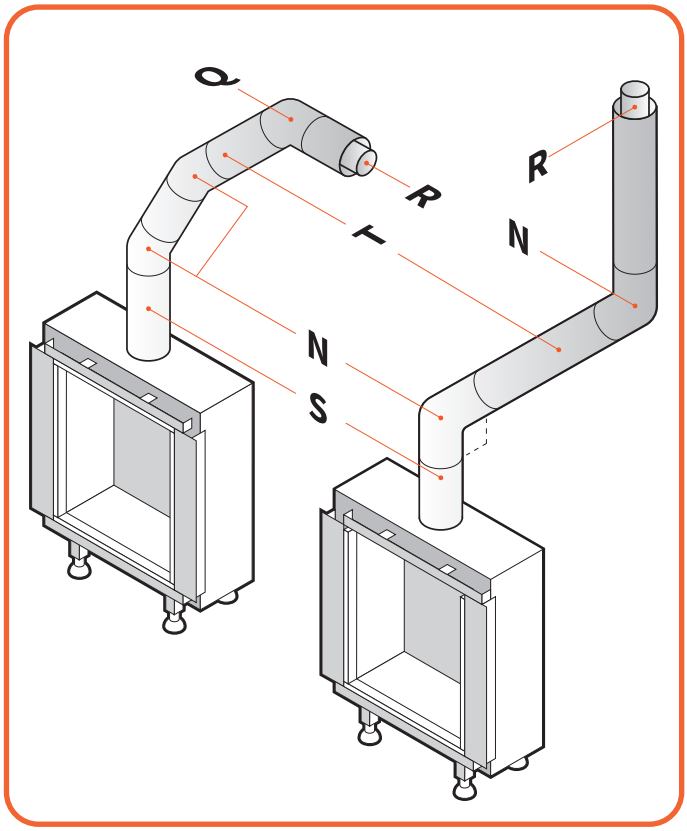

Figure 7.7 | Flue bends examples

R	Horizontal or vertical terminal
N	Bend 45° & 90° vertical to horizontal and vice versa
Q	Bend 45° & 90° horizontal to horizontal
T	Pipe section horizontal
S	Pipe section vertical

Table 7.1 |

7.2.1 CALCULATE FLUE LENGTH

Not all parts can be adjusted! To fit the drainage system correctly, you are to use an adjustable fitting. You can use an adjustable concentric pipe, wall or roof fitting. To get a sealed flue gasconnection, the inner pipe must always be 2 cm longer than the outer pipe. Always attach adjustable parts with a chuck parker.

For proper operation of the fireplace it is important that the flue pipe meets the requirements. To determine this, we prepared a chart. (See **APPENDIX E**)

The following outcomes can be found for each intersection of TVS and THS;

Result	Action
V	No ristrictor required
O	Position the resitrictor
X	No good operation guaranteed *

A O means you have to put in a restrictor plate in your fireplace.

7.3 POWER-FAN

For flue configurations that do not function on natural draft, the PowerFan can be used. For extensive installation instructions and the operation of the PowerFan we refer to the manual of the PowerFan on the Element4 website or via your dealer.

7.4 INSTALLATION OF FLUE MATERIAL

Follow the following instrucions for the installation of flue materials;

- Drill a hole of 160 mm for the wall or roof transit with a 150 mm diameter flue connection, and 210 mm with a flue with a diameter of 200 m.
- In a situtation of non-combustible materials keep a distance of at least 50 mm between the outside of the concentric pipes and the wall or ceiling.
- Provide a (fire) safe transit construction in wall, floor or roof sheeting. Whenever venting passes through a wall, an approved heat shield or 'wall thimble' must be installed.
- Build up the system from the fireplace.
- Assemble pipes in the correct direction! The inner pipe goes into and the outer pipe goes over the fireplace connection.
- Make sure the tubes are sufficiently braced, so the weight of the tubes are not supported on the fireplace.
- The concentric pipes could come loose due to expansion and cooling down. It is recommended that a chuck parker be used in places that are inaccessible after installation.
- The horizontal flue sections must be fitted sloping to the fireplace.
- In case of long horizontal stretches, it is advised to install a tap point into the flue, at its lowest point, to be able to drain the condensation formed during burning of gas.

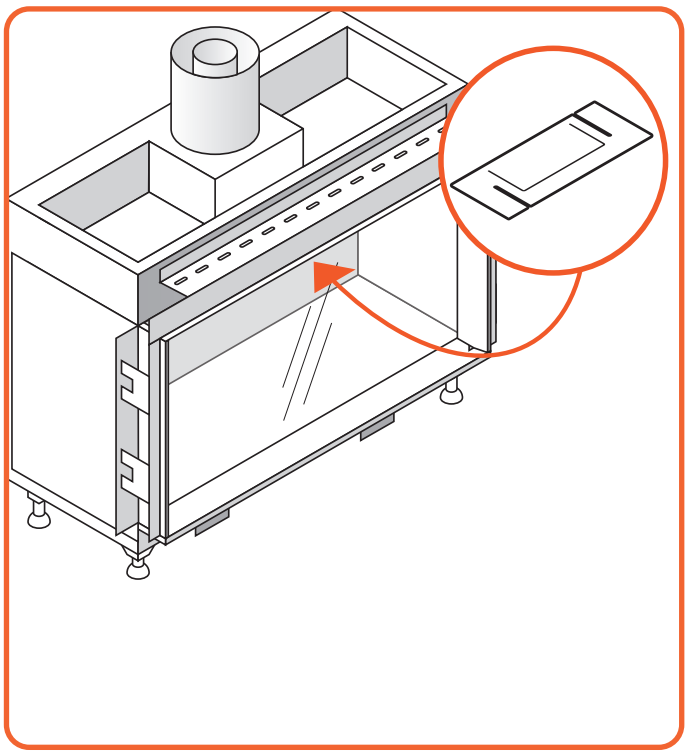

Figure 7.1 | Restrictor position

8 ELECTRICAL CIRCUIT

Figure 8.1 shows a simplified connection circuit for the fireplace. Every fireplace is provided with a main adapter.

8.1 DOMOTICA

The receiver offers the possibility to be connected to a domotica system. A special connector is being supplied for this. Type: G60- ZCE

8.2 ELEMENT4 PROCONTROL APP.

It is possible to operate your device via smartphone or tablet with the ProControl App, available in the appstore on iOS and google play on Android.

The app has a user friendly, interactive layout and the design is adjusted for Element4 devices. Up to eight devices can be used with one app, in the situation that multiple fire are installed in the same location.

Another functionality of the app is to pre-set the temperature of you device, for a period of one week, to ensure yourself of an optimal desired room temperature. Also the device can changed between high and low flames and it features an eco-setting.

The amount of users, that can operate the device is unlimited, so every family member can make use of it, by easily making a personal account. By two-way communication, one can check on the device at any moment.

To use the app, the device needs to be provided with the correct receiver and remote combination.

#	Description
(1)	Gas Block
(2)	Receiver
(3)	Main Burner
(4)	First LogBurner
(5)	Second Logburner
(6)	Pilot set
(7)	Second Thermocouple
(8)	LED Module
(9)	12V adapter
(10)	LED strips
(11)	Wifi-Box

Table 8.1 | **Components**

Necessities for the installation of the ProControl:

- 220 volt electricty near the fire
- Wi-Fi code of the router
- Smart Phone or tablet
- ProControl manual

Should any problems occur you can always check **APPENDIX B**.

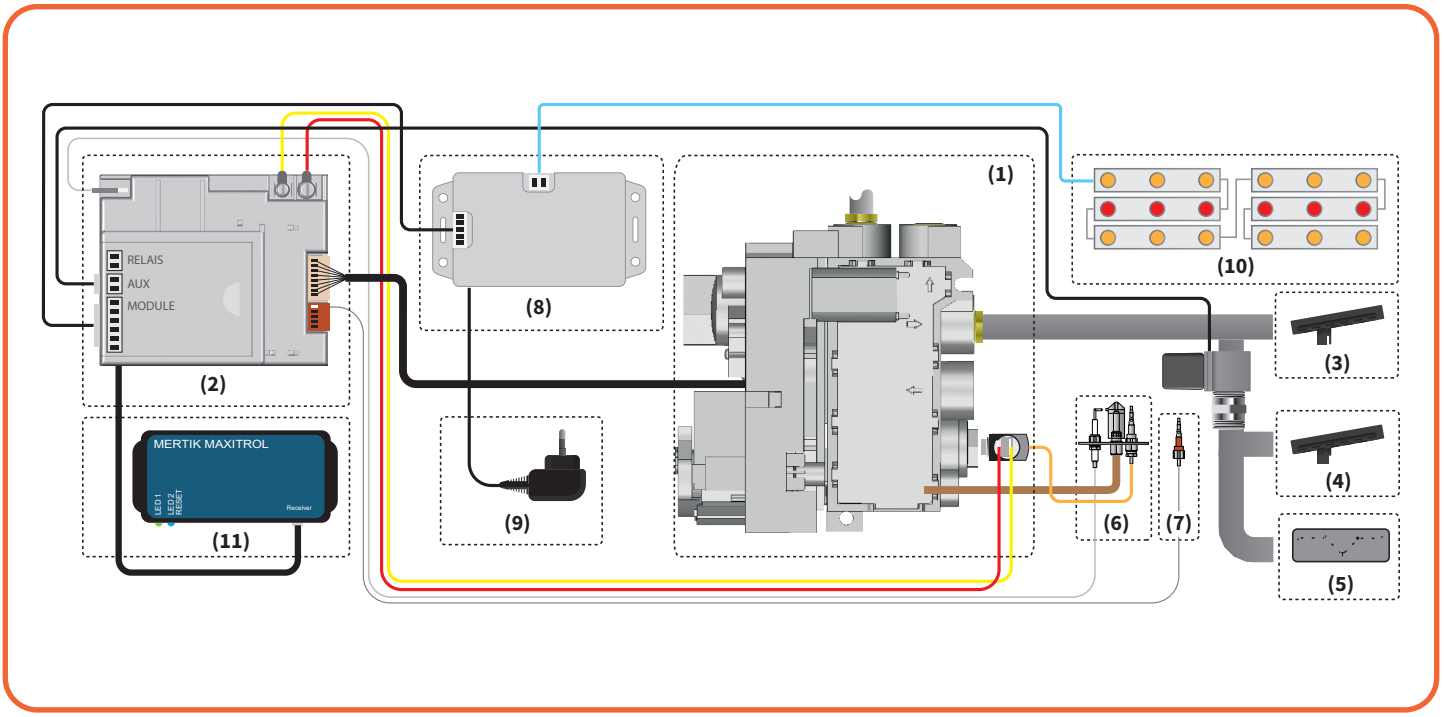

Figure 8.1 | Schematic Electronic Circuit

8.3 EXPLANATION OF THE ADDITIONAL MODULES

8.3.1 OPERATION OF THE LED MODULE

The Summum 70 a LED module. More information about both modules is described in this chapter.

VERY IMPORTANT!

The LED module works with a 12V adapter and only needs to be plugged into the LED Module itself! When the 12V adapter is connected in the Quad Module or on the receiver, it will be irrevocably damaged. Element4 cannot be held responsible for damage caused in this way to the stove or the associated electronics. See also Figure 8.1 for the connection diagram.

The Summum fireplaces from Element4 are equipped with lighting under the burner grate. All fireplaces work with the same 10 button remote control (Figure 8.2). The explanation for this can be found in the available manual. All information in this section is a supplement to this, specifically intended for the use of Element4 fireplaces with lighting.

Burner Bed

Each Summum fireplace has a three-part grid, which consists of two trays and a middle section. The trays can be easily removed for maintenance. The trays must be filled with the supplied glass crystals.

Divide the glass evenly over the bottom so that the light is well broken. Cover the glass with the chips, so that all the glass is well covered, but light is allowed through.

With the Summum you have the possibility of an imitation glowbed. The intensity of the glow can be changed as desired.

Note: When you completely switch off the fire and switch it on again at a later time, the intensity at which you switched off the fire will be the same when you switch the fire on again.

When you start the fireplace, the light bed will be switched off at all times. After the start-up process, when the second thermocouple has released the gas supply, the light bed will automatically start to glow again.

Operation lighting

The LED module can also be used to change the brightness of the LEDs. To change this observe the following steps:

- Hold the lightbulb button (**A** on the remote) until the icon in the screen starts to blink
- Press the up or down arrow (**B** and **C)** to change brightness

The final option is to have your LEDs pulsing, imitating the glowing embers in a real fire.

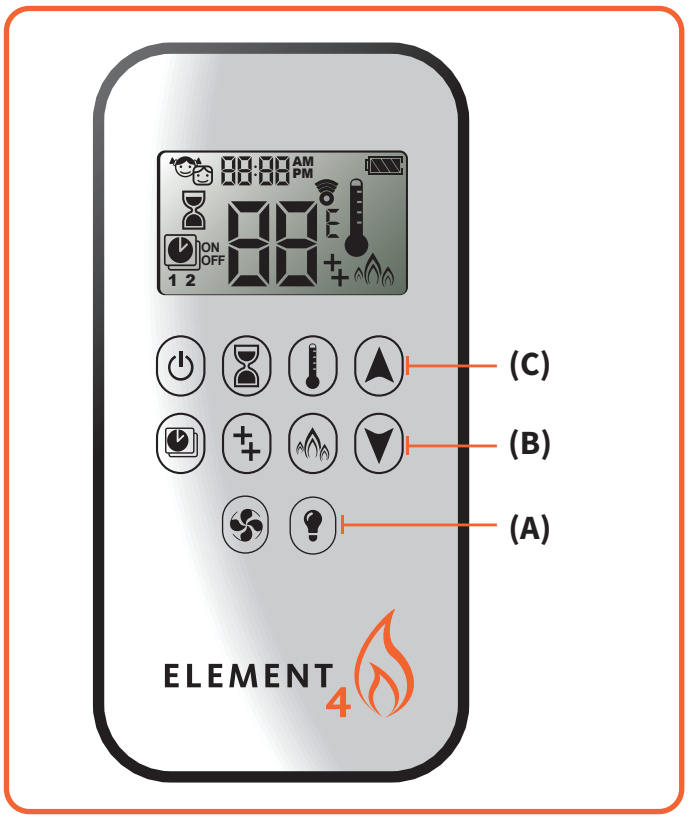

Figure 8.2 | 10-Button Remote

9 MAINTENANCE INSTRUCTION

This part of the manual focuses on maintenance. To ensure the optimal flame picture of your device, an annual maintenance by a competent company or installer is prescribed.

9.1 MAINTENANCE IN THE COMBUSTION CHAMBER

During maintenance the glass windows of the fire need to be removed. To do this follow the following steps:

9.1.1 (DIS)ASSEMBLY OF THE TRIMS

For a tight finish of the fireplace, trims are available. During maintenance these trims must be removed, before the glass can be removed. Please follow these steps:

Disassembly:

- Remove both the side trims and bottom trim. They are held by magnet snappers, Figure 9.2.

Assembly:

- Put the trims back in reversed order.

9.1.2 REMOVE GLASS

To be able to cleam the glass on the inside, one needs to remove the glass. To do this follow these steps:

- Check, whether the trims are removed in as in step 10.1.1.
- Remove the ropes holding the glass (See Figure 9.3)
- Put the section cup on the glass and make sure it is properly vaccuumed, so it will not come off. (See Figure 9.4)
- Lift the glass out of the lower glass rail and tilt it out through the opening, as seen in Figure 9.5.

NB: Put away the glass in a safe place, when you are not using it, to make sure it will not damage during maintenance. Remove the suction cup after putting away the glass to avoid tracing or stains.

9.2 CLEANING THE GLASS

Keep in mind the following when cleaning glass:

- Always clean the glass at room temperature.
- Use cleaning supplies qualified by Element4.
- When you clean your Anti-Reflective glass, make sure you use this with the special Element4 cleaner, which is available only via Element4.
- Use only a microfibre cloth. Other materials such as kitchen towels, steel wool etcetera can cause scratches or damage the coating on the glass.
- Should there occur stains on the glass, remove them regulary, for the can burn the glass.

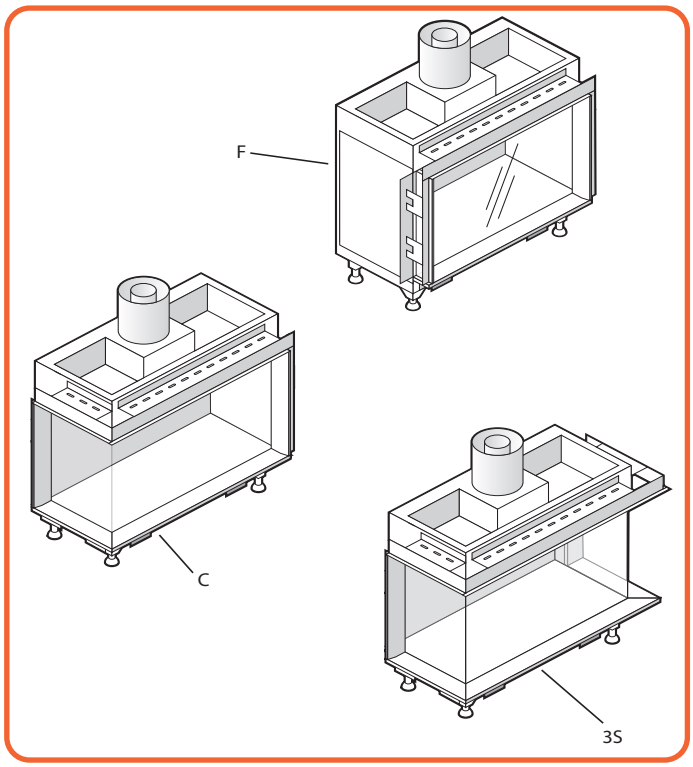

Figure 9.1 | Summum 70 models

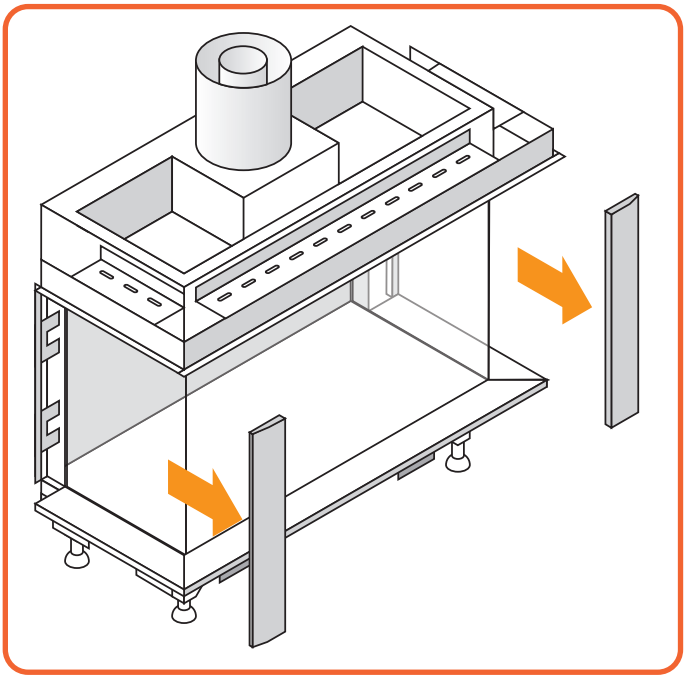

Figure 9.2 | Remove side trims

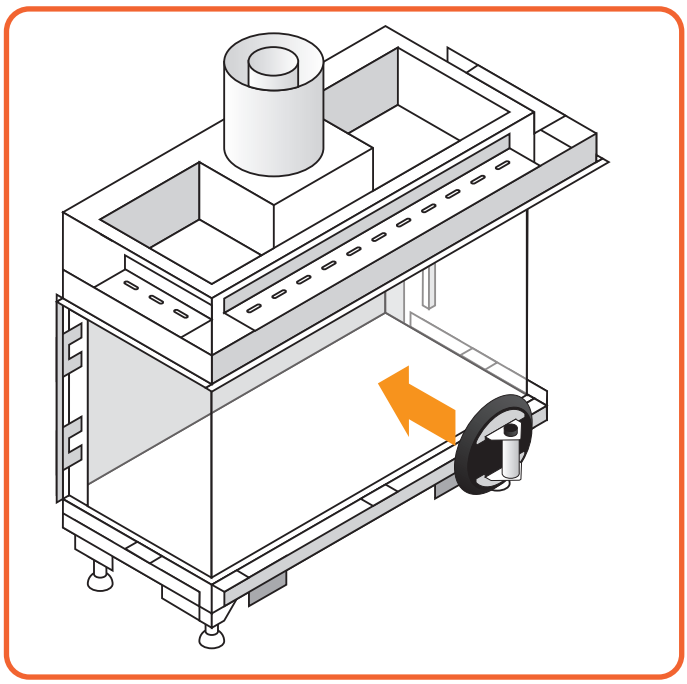

Figure 9.3 | Put on suction cup

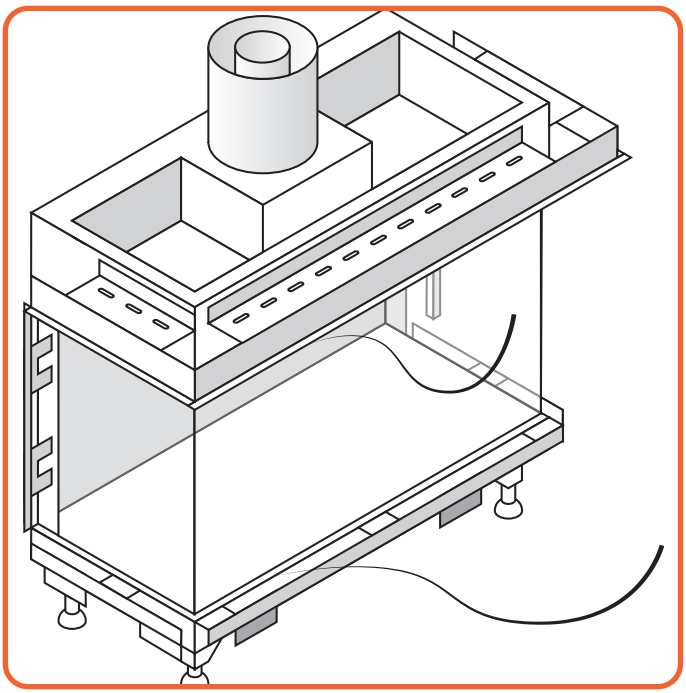

Figure 9.4 | Remove Glass ropes

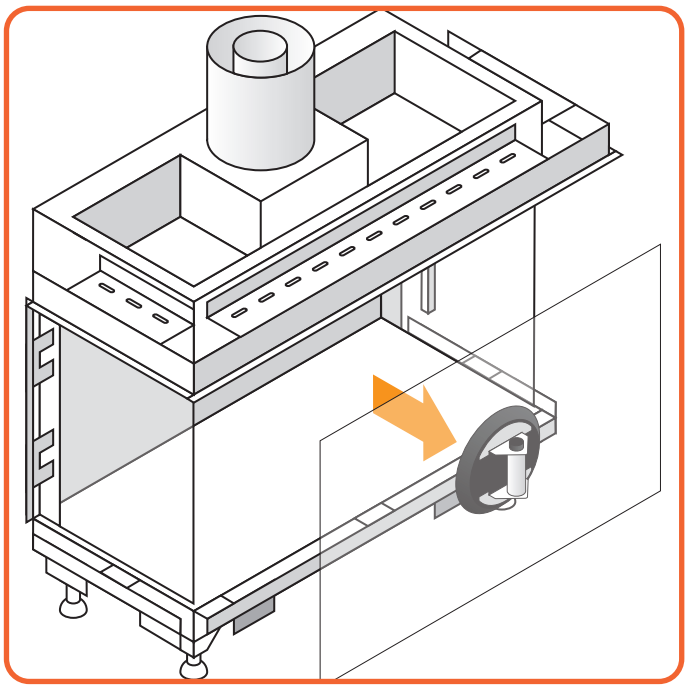

Figure 9.5 | Remove Windows

9.3 SERVICING THE BURNER

A fault finding chart is included in **APPENDIX A** for the Mertik control system fitted to this appliance. Access the Burner via the maintenance access.

For the maintenance of the burner different parts can be distinguished, all mentioned below. See Figure 9.20 and Figure 9.21 and Table 9.1 for more info.

#	Part
1	Pilot flame
2	Ignitor Rod
3	Pilot Thermocouple
4	Second Thermocouple
5	Thermocouple stand

Table 9.1 |

9.3.1 BURNERS

The flames from the burners should be visually checked. The flame should have a small blue base and be bright yellow. Too orange flames indicate too little oxygen. Flames that are too blue have too much oxygen. The oxygen in the primary air can be adjusted slightly at the venturi throttles, but should not be necessary.

Maintenance of the burner should also be unnecessary. If this is the case, check the burner pressure at the inlet to the burner. The instructions of changing the burner pressure and the correct pressure per gastype can be found in

9.3.2 PILOT

The pilot flame must be visually checked. The pilot flame must always be present when the appliance is in operation.

The pilot has two distinct flames, one engulfing the thermocouple on its left, the other reaching across to the burner.

The area around the pilot should be inspected for cleanliness. Lint or foreign material must be removed with a brush or vacuum.

9.3.3 THERMOCOUPLES

The Element4 fireplaces have two thermocouples; one next to the pilot and one opposite the pilot side of the burner. The completeness and operation of both must be checked. A qualified installer must confirm that both thermocouples are in place and undamaged. While checking the thermocouple, please ensure that the ignitor rod is not cracked as well.

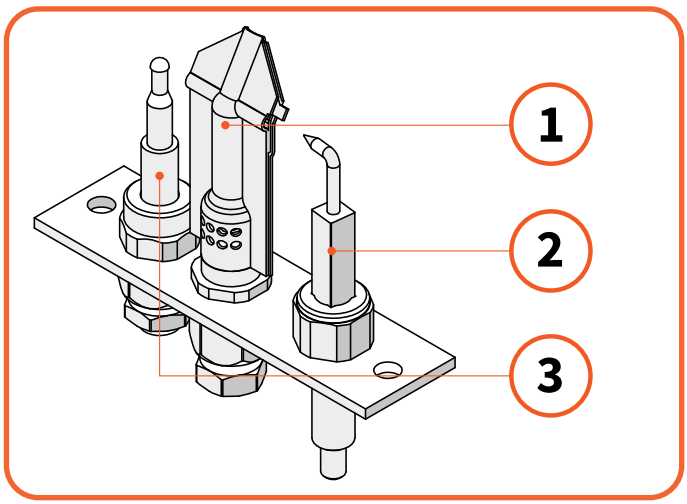

Figure 9.6 | Isometric drawing of the pilot set

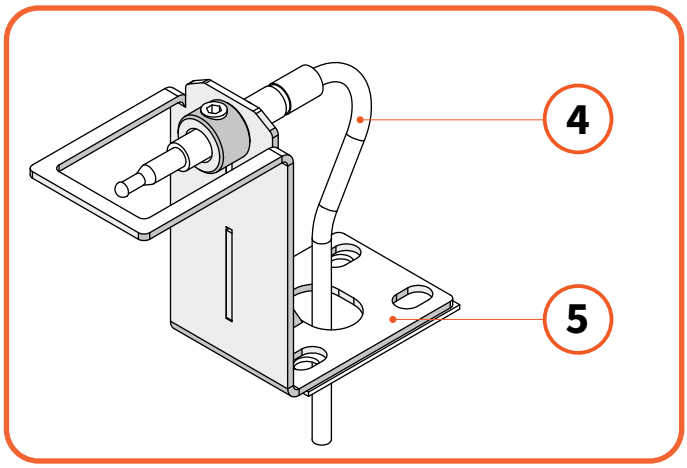

Figure 9.7 | Isometric drawing of second thermocouple

10 DECORATIVE (CERAMIC) PARTS

This appliance is equipped with a ceramic fire bed with heat-resistant ceramic fibers, or artificial glassy silicate fibers. Excessive exposure to this material may cause irritation to the eyes, skin and respiratory tract. We therefore recommend that the dust emission is reduced as much as possible when handling these materials.

10.1 DECORATION ARRANGEMENT

Only the decoration ceramics supplied with this appliance are to be used. The ceramics must be laid only as shown on this page. Replacement parts are available from your dealer, but should only be installed by a qualified installation engineer.

An elaborate decoration instruction is found on the sheet in the logset that comes with the fire. These instructions show you how to decorate the fire step by step.

Position the decoration logs as shown on the image below.

Make sure that the pilot flame area and the second thermocouple are always free of any decorative material to make certain that the fire will ignite without problems. Not doing so may cause the fire to explode on ignition!

10.1.1 CLEANING THE CERAMICS

Gently remove and clean the ceramics in the open air, using a soft brush and a vacuum cleaner. Where necessary replace damaged components only with genuine Element4 specified parts. Seal any scrap ceramics in plastic bags and dispose at proper refuse sites. When using a vacuum cleaner, it is recommended that one with a HEPA filtering system is used.

Re-fit the firebed arrangement, reseal the appliance and check the safe operation of the appliance.

Figure 9.1 | Logset Summum 70

11 OPERATING THE FIREPLACE

11.1 BEFORE THE FIRST FIRE

1. Make sure the cables of the ignition are hanging loosely under the device, to ensure a good ignition. Remove any tie wraps or other cable binders.
2. Make certain that all construction materials have been removed from inside and around the fireplace and the fireplace has been cleaned of any construction dust.
3. Clean the glass BEFORE and AFTER the first fire on both sides of the glass.
4. Properly place, clamp and seal the glass panels.
5. Ensure the receiver is powered with an AC Adapter OR Batteries, but not both!
6. Place the two (2) AAA batteries into the remote control and confirm that it will communicate with the receiver by pressing the ON/OFF button.
7. Check the pilot and second thermocouple for obstructions
8. Check the air tightness of the system.

More technical specifications can be found in **APPENDIX F**.

11.2 THE FIRST FIRE

When the fireplace is fired for the first time, one should check the behaviour of the fireplace to see if all is functioning well.

Should any problems occur during first firing a troubleshooter can be found in **APPENDIX A** for the gas parts and **APPENDIX B** provides an overview of possible error codes in the remote control.

11.3 SENSORY CHECKS

11.3.1 VISUAL CHECKS

Condensation

When the glass is cold, some condensation may appear on the glass after lighting the fireplace. This is normal as the combustion air contains a little water and the product of the gas being burned is not yet evaporating. The condensation will disappear as the glass warms.

To ensure as little condensation as possible and, as an additional benefit, to decrease the release of solid nitrogen oxide particles which are bad for the environment, the fireplace will start on just the main burner. During the first minute of firing this will ensure your fireplace to evaporate the condensation on the glass and heat up the air in the combustion chamber.

Please note: During the first minute of firing i.e. the initial start up sequence of lighting the pilot flame and the first 30 seconds until the second thermocouple has given its clear, it is not possible to use the 'double plus'-button to switch between burners.

Flames and soot

During this first fire, examine the flame for appearance and quality. Flames may appear blue at first, but will turn yellow after 15 to 20 minutes.

Examine the logs for sooting. Too yellow (near orange) flames indicate a problem with the combustion air. Clear black soot may then settle on the decoration material. When this is the case, you may contact your dealer.

This fireplace has a 2nd thermocouple saftey system, which senses the burner flame. The system will turn itself off if the system does not sense the 2nd thermocouple output within 29 seconds after the valve opens.

Coating

When firing up the device for the first time, make sure the device burns for several hours on the highest level, to ensure the lacker to harden. If an enclosure has not yet been constructed, these fumes may also be visible around the fireplace.

Because a fireplace is a heat source, natural convection will occur around it. Solid particles in the circulating air may burn and settle down on cold surfaces, causing discoloration. Discoloration is an annoying problem and it is difficult to solve once happened.

These particles can come from construction moisture or cigarette smoke, but also they might be volatile components in paint, construction materials or carpeting. For newly constructed chimneys or after a big reconstruction, it is advised to wait a minimum of six weeks before firing a fireplace. After this burn-off period, turn off the fireplace and let it cool completely to room temperature and once again clean both sides of the glass as well as the interior panels.

11.3.2 SMELL CHECK

When the fireplace is first heated, an odor may be given off by the hot metal. Make sure the device and enclosure are ventilated enough, so the possible released fumes are being abducted. The fumes are the result of the 'burn off' of the lubricants and sealants used when manufacturing the fireplace.

We advice to be as little in the room as possible during this process. It is recommended that you open the nearby windows for extra ventilation and then operate the fireplace for at least four hours.

11.3.3 SOUND CHECK

Since the product is a metal fireplace, the heat-up and cool-down cycles may produce some (initial) noises caused by the expansion and contraction of these metals. These are normal but should not be audible at more than a meter distance from the fireplace.

A TROUBLESHOOTER

A.A FIRST AID FOR MALFUNCTION

Below you will find an overview of the possible cause and solution in the event of a failure.

	Problem		Possible Cause	Solution
A	**No transmission (motor will not run)**	1	Batteries in the receiver empty	Replace the batteries (4x 1.5V AA)
		2	Batteries hand remote empty	Replace the batteries (2x 1.5V AAA)
		3	6V-adapter defective	Check the adapter Replace the adapter if necessary
		4	Hand transmitter not linked to the receiver	Connect the hand transmitter to the receiver Press and hold the reset button until you hear two beeps. After the second longer tone, release the reset button. Press within 20 sec. on the down arrow on the hand transmitter Two short beeps confirm that the code has been set. **Tip:** For this action a video is available on our youtube channel
B	**Receiver does not receive a signal**	1	Receiver defective	Replace receiver
		2	Bend pin connection on the receiver	Bend the pen straight again (See Figure A.A)
		3	Hand transmitter defective	Replace the hand transmitter
		4	No or bad reception. The receiver is in a metal box! This disturbs the reception.	Change the position of the antenna (See Figure A.B)
C	**No ignition; no beep**	1	Receiver defective	Reset the receiver (See K1) If necessary, replace the receiver
D	**No ignition; receiver gives a five-second beep**	1	Loose contact in the thermocouple circuit / wiring 2nd thermocouple	Check plug connections Repair the wiring if necessary
		2	Receiver defective	Replace receiver
		3	Magnetic coil defective	Replace gas block / or only coil coil
		4	Bent pin connection on the receiver	See **APPENDIX B**
		5	Thermocouple broken	Check the thermocouple at the bottom of the pilot burner if necessary. fracture. Replace the thermocouple if necessary
E	**Ignition stops after 1 spark**	1	Mass on the gas block not OK	Remove the 20mm Torx screw (See Figure A.C) File or scrape the surface thoroughly Reinstall the Screw and tighten it securely Tip: For this action a video is available on our youtube channel
F	**No pilot flame but there is an ignition**	1	No gas	Check / measure gas inlet pressure
		2	Air in the gas line	Venting the gas line can be done via test point A (Figure A.D) **Tip:** For this action a video is available on our youtube channel
		3	Pilot flame blocked	Check pilot burner
		4	Thermocouple wiring is incorrect	Check the wiring on the interrupter (See Figure A.E) Check the wiring on the receiver (See Figure A.F)

Figure A.A | Bend pin

Figure A.D | Testpoint

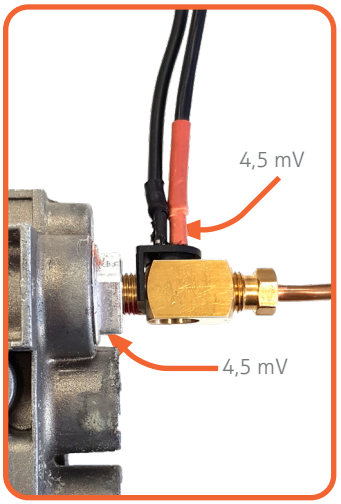

Figure A.E | Interrupter

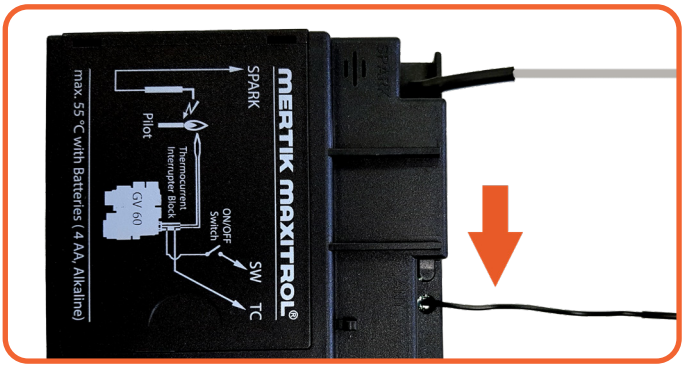

Figure A.B | Antenna

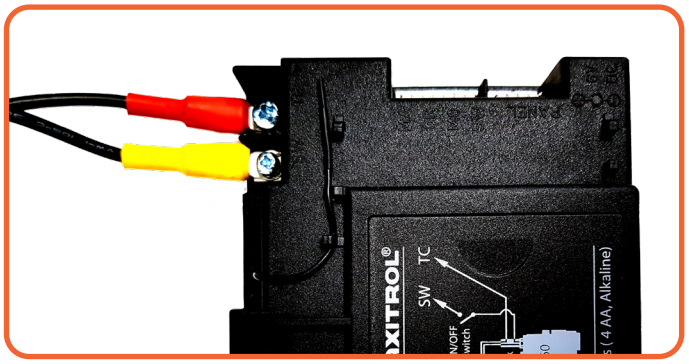

Figure A.F | Wiring receiver

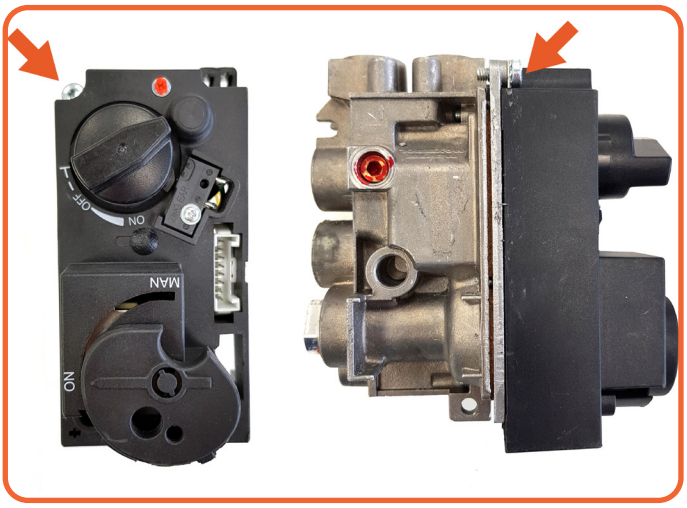

Figure A.C | Torx screw

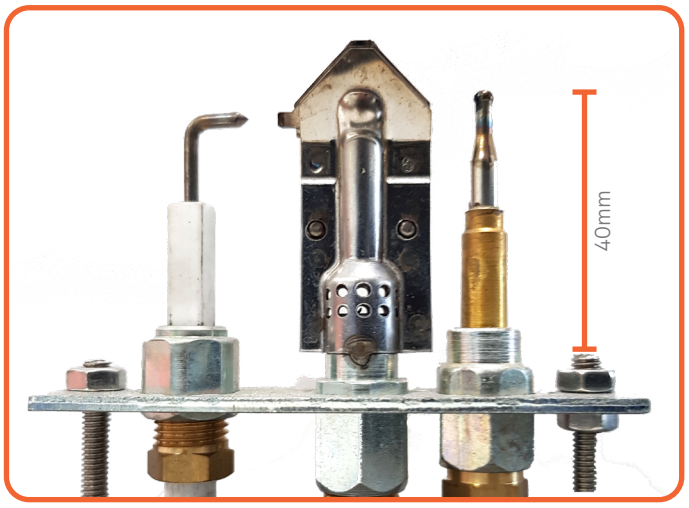

Figure A.G | Pilot set

	Problem		Possible Cause	Solution
G	**The pilot light goes on but goes out immediately when the main burner switches on**	1	Insufficient voltage across the thermocouple or too much resistance in the thermocouple circuit	Place the measuring pins of the multimeter on the ground and black cable of the breaker. This value must be at least 4.5 mV. **Tip:** For this action a video is available on our youtube channel
		2	Gas pressure loss may cause the pilot flame to be too small	Check and measure the pre-pressure via test point A (See Figure A.D) **Tip 1:** Measure the pre-pressure load and unloaded **Tip 2:** For this action a video is available on our youtube channel
		3	Thermocouple defect	Replace thermocouple **Tip:** Always use a new pressure piece when a thermocouple is replaced
		4	Thermocouple is incorrectly positioned	Check the position of the second thermocouple. (See Figure A.G)
H	**Check the position of the second thermocouple. (See Figure A-7)**	1	Decoration material blocks 2nd thermocouple	Leave the space around and at the 2nd thermocouple free of decorative material. (See Figure A.H)
		2	Burner grille does not fit well with the 2nd thermocouple	Position burner grate
		3	Airflow in the burner chamber causes a restless fire image	Check drain configuration Fit a flue gas limiter
I	**Receiver gives 3 short beeps after each command:**	1	Batteries in the receiver are empty	Replace the batteries4x 1.5V AA
J	**Pilot is on but the main burner does not start working:**	1	Gas valve is on manual	Set Knob A must be in the ON position (see Figure A.1).
K	**Double burner does not work:**	1	RESET the receiver	Briefly press the RESET button and the receiver sounds 1 beep (See Figure A.J)
		2	Wiring loose on the receiver	Click the plug in the AUX position on the receiver. (See Figure A.K)
		3	Solenoid valve does not switch	Replace the solenoid valve. Tip: Only connect a new valve to the receiver first
		4	Remote defective.	Check if the AUX symbol is on the display when you press the PLUS PLUS key on the remote. (See Figure A.L)
L	**No response from the receiver when the fireplace is started via smartphone or tablet.**			Disconnect the Wi-Fi box from the receiver Click the plug from the SI connection on the receiver (See Figure A.M) **Tip:** Reset the home router If the fireplace now functions normally, check the Wi-Fi settings
M	**Hearth does not respond via Domotica system**			Disconnect the cabling on the Domotica system and start the fire with the hand transmitter When the fireplace now reacts normally, the problem is in the Domotics

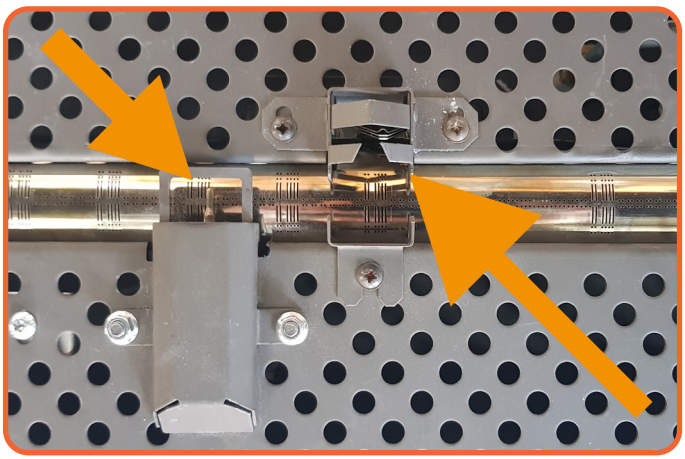

Figure A.H | Second thermocouple

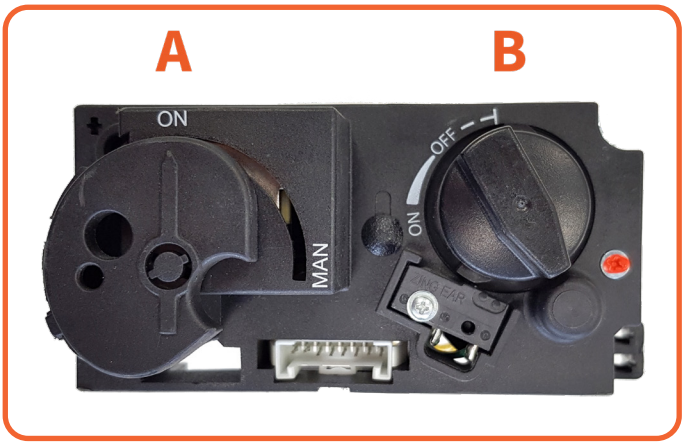

Figure A.I | Button A on "On"

Figure A.J | RESET-button

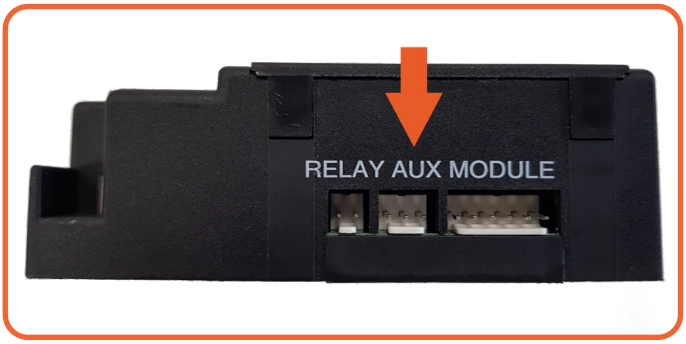

Figure A.K | Aux-position receiver

Figure A.L | "Double plus"-button on the remote

Figure A.M | SI-port

MODE	CONTACT
Ignition Main Burner	1 & 3
High Flames	1
Pilot	3
Extinguish Main Burner	1, 2 & 3
Ignite second burner	1 & 2
Extinguish second burner	2 & 3

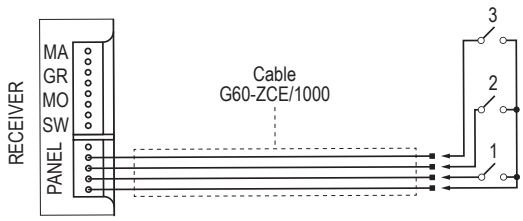

Figure A.N | Domotica system

A.B NECESSARY TOOLS

To help out the installers, mechanics and others who need to do work on our fireplaces e.g. during maintenance, a list is compiled of tools Element4 expects are being carried during said services.

When all these tools are available during service, Element4 guarantees all problems, apart from part failure can be solved.

Please note

If a problem is found, that cannot be solved on site, always contact your dealer or directly contact Element4 via our credentials which can be found on the back page of this manual.

Figure A.0 | Tool overview for service

B ERRORS CODES PROCONTROL APP

B.A MESSAGES SHOWN IN APP

Error code	Message in App	Description	Possible cause
F02	Contact Service.	• 5 sec. beep from Receiver • Fire is not responding; no ignition	• Microswitch not making contact with cam on motor knob • Motor wiring is incorrect • Reversed polarity or faulty Microswitch • Bent Motor Knob
F03	Contact Service.	• 5 sec. beep from Receiver • Ignition process is interrupted • Fire is not responding; no ignition	• Thermocouple wiring is incorrect • Thermocouple wiring is not connected • ON / OFF switch in O (OFF) position
F04	Ignition Sequence Malfunction. Wait 1 minute. Retry ignition.	• No pilot flame within 30 sec. • NOTE: After 3 failed ignition sequences F06 shown	• No gas supply • Air in pilot supply line • No spark • Reversed polarity in thermocouple wiring • Check for correct pilot orifice (LPG to NG or vice versa)
F05	Contact Service.	• Pilot burner fails to ignite or shuts off • Motor stays in pilot position	• Not enough thermo-voltage • Air in the pilot supply line • Low inlet pressure • Bad thermocouple
F06	Contact Service.	• 3 failed ignition sequences within 5 minutes • Fire is not responding; no pilot flame	• No gas supply • Air in pilot supply line • No spark • Reversed polarity in thermocouple wiring • Check for correct pilot orifice (LPG to NG or vice versa)
F07	Replace Handset Batteries.	• Battery icon flashes on handset display	• Low battery power in handset
F08	Contact Service.	• Low Receiver battery power supply • Short beeps for 3 sec. during motor turn	• Low Receiver battery power supply
F10	Contact Service.	• Pilot lit • Main burner fails to ignite and pilot shuts off • Ignition is blocked for 2 minutes	• 2nd thermocouple is out of position • 2nd thermocouple wiring is incorrect • Gas logs out of position • Gas ports for burner are blocked
F12	Contact Service.	• Motor turns to pilot position	• Receiver powered by batteries and Receiver temperature exceeds 60 °C • Check air circulation and heat shield
F13	Contact Service.	• Motor turns to pilot position • Fan at level 4 for 10 minutes (T > 80 °C)	• Receiver temperature exceeds 80°C • Check air circulation and heat shield
F14	Contact Service.	• 5 sec. beep from Receiver • Fire is not responding; no ignition	• Receiver software doesn't support a 2nd thermocouple • Wrong Receiver
F15	Contact Service.	• 5 sec. beep from Receiver • Fire is not responding; no ignition	• 2nd thermocouple wiring is incorrect • 2nd thermocouple wiring is not connected
F16	Handset out of range.	• No temperature shown in App	• Handset out of range for more than 1.5 h • Electrical interference
F17	Contact Service.	• Fire is not responding; no ignition	• Inlet voltage exceeds 7.25 V • Malfunction of Mains Adapter
F18	Contact Service.	• Switch panel / touch pad not functioning	• Switch panel / touch pad is locked • Short in cable or button
F19	Contact Service.	• Pilot drops when Motor opens main gas	• Insufficient thermo-voltage • Thermocouple malfunction • Low inlet gas pressure • Improper thermocouple flame impingement • Carbon build-up on thermocouple • Valve malfunction • Resistance in thermocurrent circuit

Error code	Message in App	Description	Possible cause
F26	Contact Service.	• It is not possible to increase flame height after ignition • Fan at level 4 for 10 minutes (T > 80 °C)	• Receiver powered by batteries and Receiver temperature exceeds 60°C • Receiver powered by mains power and Receiver temperature exceeds 80°C
F27	Contact Service.	• Fire is not responding • No electronic control of fire	• No handset or Wi-Fi Box connected to Receiver for more than 3 hours
F28	On-Demand Pilot	• Pilot shuts off after a predefined time	• Pilot shuts off after no motor movement for a predetermined time
F31	Contact Service.	• Fire is not responding • No electronic control of fire	• Receiver or Wi-Fi Box malfunction • Connection cable from Receiver to Wi-Fi Box defective
F41	Check Wi-Fi	• Fire is not responding • No electronic control of fire	• No Wi-Fi connection to myfire Wi-Fi Box, router and / or smart device • Wi-Fi in smart device is deactivated
F42	Check Wi-Fi	• Fire is not responding • No electronic control of fire	• No power to router • No Wi-Fi connection to router and / or smart device Smart device not in the correct home network
F43	No Receiver Connected. Contact Service.	• Fire is not responding • No electronic control of fire	• No communication between Receiver and myfire Wi-Fi Box
F44	Contact Service.	• No temperature shown in App • N.a. (not applicable) displayed in App	• Handset not within range Low battery power in handset
F49	Contact Service.	• No electronic control of fire	• Receiver software < 8.32 is not supported by myfire Wi-Fi Box Version 2
F50	Contact Service.	• No electronic control of fire	• Handset software < SW 231 is not supported by the myfire Wi-Fi Box Version 2

B.B MESSAGES SHOWN IN REMOTE

Error code	App Message	Time	Description	Possible Cause
F04	F04	4 sec.	• No pilot flame within 30 sec. • NOTE: After 3 failed ignition sequences F06 shown	• No gas supply • Air in pilot supply line • No spark • Reversed polarity in thermocouple wiring
F06	F06	4 sec.	• 3 failed ignition sequences within 5 minutes • Fire is not responding; no pilot flame	• No gas supply • Air in pilot supply line • No spark • Reversed polarity in thermocouple wiring • Check for correct pilot orifice (LPG to NG or vice versa)
F07	F07	Until batteries replaced	• Battery icon flashes on handset display	• Low battery power in handset
F09	F09	4 sec.	• Fire is not responding • No electronic control of fire	• Down arrow button was not pressed during pairing • Receiver and handset are not synced
F46	F46	4 sec.	• Fire is not responding • Intermittent response • No electronic control of fire	• No or bad connection between receiver and handset • No power at Receiver (batteries low) • Mains adapter faulty, set not communicating with Receiver)

C FAULTS AND ERROR CODES IN THE REMOTE

Consult this appendix, when error messages occur in the application for smartphone and tablet.

C.A F41 ERROR

This message will appear if there is no or bad Wi-Fi reception, this can be between app and router or Wi-Fi box and router

By closing the App and opening it again, this is solved in most cases.

Cause

The cause may be that the ProControl module is blocked or is too far away from the router. See: **router information**.

Possible solution

- Only place an external router for the ProControl module
- Strengthen existing Wi-Fi signal
- Resetting the router.

C.B ROUTER INFORMATION

C.B.A MINIMUM REQUIREMENT

- Compatible with IEEE 802.11n / g / b
- WPA2 encryption
- Radio frequency 2.4 GHz band
- Wireless automatic channel: Automated search for WLAN radio channel that is free from interference.
- Support for the User Datagram Protocol (UDP)

C.B.B WI-FI ROUTER

It is important to think carefully about the location of a router. This device spreads the wifi signal in and around your home. Therefore, preferably choose a central position. You prevent long distances from occurring. Many people put the router in the meter cupboard, because that is where the internet comes in at many households. A bad choice! For a powerful WiFi signal, the router needs as much space as possible. Therefore, do not place the device near a wall or on the ground. Some routers have multiple antennas that you can target. Try to spread these antennas so that you increase the range.

C.B.C JAMMERS

Many devices also emit radio waves just like your router. These include microwave ovens, wireless doorbells, baby monitors, Bluetooth adapters, wireless music systems, DECT telephones and security cameras. These devices can disrupt your wireless network (interference), so the Wi-Fi connection is not optimal. Try to keep jammers as far away as possible from the router. Neighboring wireless networks also play a role in the Wi-Fi area.

C.B.D FREQUENCY

By default, most routers use the 2.4 GHz band to broadcast the Wi-Fi signal. The disadvantage is that this frequency band is very busy, so that there is quickly interference. There are a lot of competing users and jammers using the same radio waves.

Since most "older" laptops, smartphones, tablets and other devices can not connect via the 5GHz band, the ProControl module is not suitable for 5GHz band.

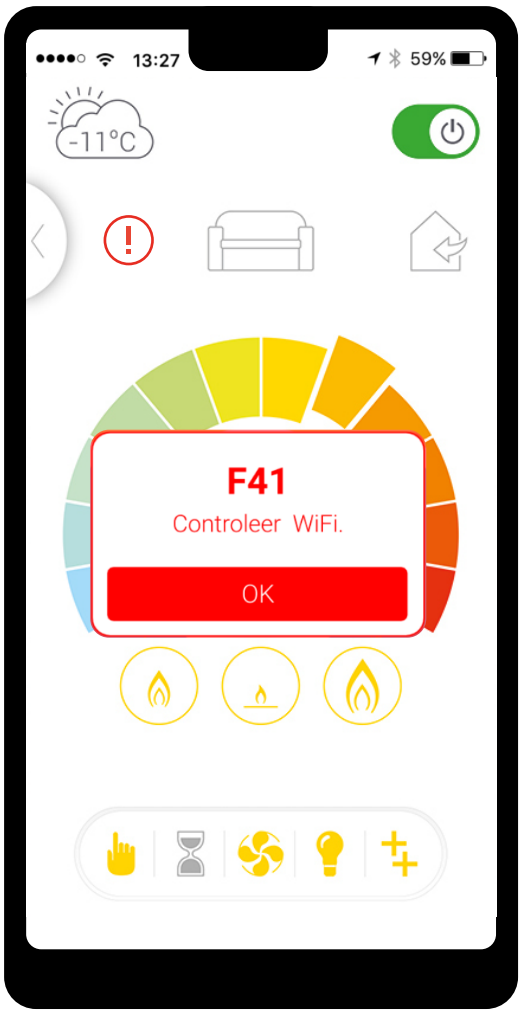

Figure C.A | Error F41 screen of the ProControl App

D TERMINAL LOCATION

D.A TERMINAL LOCATION WITH VERTICAL EXHAUST (C11)

Distance	Exhaust 1,2 of 3	
At the same roof level	> 6m	*
At a different roof level	> 3m	* & **
On a lower wall	> 2m	*
On a higher sloping surface	> 6m	***

"**Distance**" = minimum distance required to position the exhaust in order to prevent adverse effects in relation to;

1. A ventilation opening of a used room, toilet or bathroom
2. Supply of heated air when the supply flows through a used room.
3. A window that can be opened and located in the vicinity of a used room, toilet or bathroom.

* If the required distance is not feasible, the rules regarding the exit position have priority.

** If the exhaust is placed at least one meter higher than the inlet opening, or a window that can be opened.

*** If the required distance is not feasible, the exhaust must be placed at least one meter above the highest façade / roof.

(4) The terminal may not be placed closer than 300 mm to an opening in the building such as a window frame.

D.B TERMINAL LOCATION WITH HORIZONTAL EXHAUST (C31)

	Position terminal	dist. (mm)
A*	Directly below an opening, ventilation stone, casement window etc.	600
B	Above an opening, ventilation stone, casement window etc.	300
C	In addition to an opening, ventilation stone, casement window etc.	400
D	Under gutters or drain pipes	300
E	Under eaves	300
F	Under balconies or roofs of open garages	600
G	From a vertical drain pipe	300
H	From an inside or outside corner	600
I	Above ground roof or balcony level	300
J	From a surface opposite the tip	600
K	From an end opposite the tip	600
L	From an opening in the open garage (e.g. door, window in the house)	1200
M	Vertically from one end to the same wall	1500
N	Horizontally from one end to the same wall	300
P	From a vertical structure on the roof	600
Q	Above the intersection with the roof	150

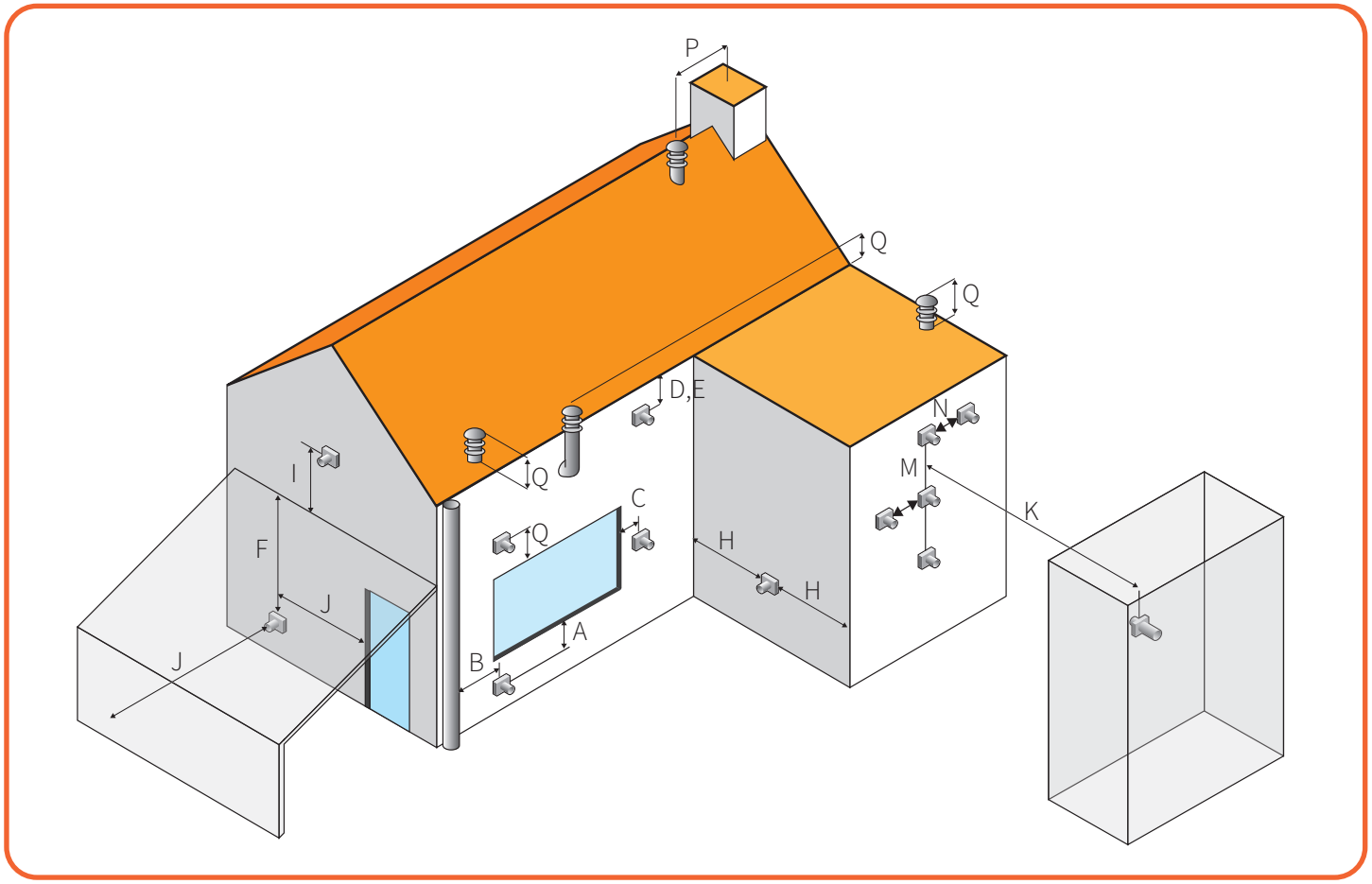

Figure D.A | Terminal Location

E CALCULATION TABLES FLUEGAS RESTRICTION

In the calcualtion table yo ucan see when you need to place a flue gas restrictor

This fireplaces has a minimal start length of 1 meter.

Attention: For information on how to calcualte bends see CHAPTER 7

Result	Action
V	No restrictor needed
O	Place the restrictor
X	No good operation guaranteed*

E.A HORIZONTAL TERMINAL FLUE DIAMETER 200/130

Total vertical Section	0	0.5	1	2	2.5	3.5	4	4.5	5
10	O	O	O	O	O	O	O	V	V
9	O	O	O	O	O	O	O	V	V
8	O	O	O	O	O	O	O	V	V
7	O	O	O	O	O	O	O	V	V
6	O	O	O	O	O	O	O	V	V
5	O	O	O	O	O	O	O	V	V
4	O	O	O	O	O	O	O	V	V
3.5	O	O	O	O	O	O	O	V	V
3	V	V	V	V	V	V	V	V	V
2.5	V	V	V	V	V	V	V	V	X
2	V	V	V	V	V	V	V	X	X
1.5	V	V	V	V	V	V	X	X	X
1	V	V	V	V	V	X	X	X	X

Total Horizontal Section

E.B VERTICAL TERMINAL FLUE DIAMETER 200/130

Bij een dakdoorvoer is de minimale verticale hoogte 1 meter.

Total vertical Section	0	0,5	1	2	2.5	3.5	4	4.5	5
23	X	X	X	X	X	X	X	X	X
22	V	X	X	X	X	X	X	X	X
21	O	O	V	X	X	X	X	X	X
20	O	O	V	V	X	X	X	X	X
19	O	O	O	O	V	X	X	X	X
18	O	O	O	O	O	V	V	X	X
17	O	O	O	O	O	O	O	V	V
16	O	O	O	O	O	O	O	O	V
15	O	O	O	O	O	O	O	O	V
14	O	O	O	O	O	O	O	O	V
13	O	O	O	O	O	O	O	O	V
12	O	O	O	O	O	O	O	O	V
11	O	O	O	O	O	O	O	O	V
10	O	O	O	O	O	O	O	O	V
9	O	O	O	O	O	O	O	O	V
8	O	O	O	O	O	O	O	O	V
7	O	O	O	O	O	V	V	V	V
6	O	O	O	O	O	V	V	V	V
5	O	O	O	O	O	V	V	V	V
4	O	O	O	O	O	V	V	V	V
3.5	O	O	O	O	O	V	V	V	V
3	V	V	V	V	V	V	V	V	V
2.5	V	V	V	V	V	V	V	V	X
2	V	V	V	V	V	V	V	X	X
1.5	V	V	V	V	V	V	X	X	X
1	V	V	V	V	V	X	X	X	X

Total Horizontal Section

E.C REDUCTION TO FLUE DIAMETER 150/100

Length including througput

Total vertical Section	0	0.5	1	1.5	2	2.5	3	3.5	4
10	V	V	V	V	V	V	V	V	V
9	V	V	V	V	V	V	V	V	V
8	V	V	V	V	V	V	V	V	V
7	V	V	V	V	V	V	V	V	V
6	V	V	V	V	V	V	V	V	V
5	V	V	V	V	V	V	V	V	V
4	V	V	V	V	V	V	V	V	V
3.5	V	V	V	V	V	V	V	V	V
3	V	V	V	V	V	V	V	V	V
2.5	V	V	V	V	V	V	V	V	V
2	V	V	V	V	V	V	V	V	X
1.5	V	V	V	V	V	V	V	X	X
1	V	V	V	V	V	V	X	X	X

Total Horizontal Section

* Perhaps the powerfan is a good solution here.

F TECHNICAL DATA

The dataplate specifies for which type of gas, gas pressure and for which country this appliance is intended. The nameplate is attached to the fireplace with a cable and should remain attached to the fireplace

Note: Check whether the appliance is suitable for the gas type and gas pressure on site.

		NATURAL GAS					LPG			
Gas type »										
Country of use »		AT,BG,CH DK,ES,FI GB,GR,HR IE,IT,LT LV,NO,PT RO,SE,SI SK,TR	DE,LU PL	BE,FR	DE	NL	BG,DK,EE FI,GB,GR HU,HR,IT LY,MT,NL NO,RO,SE SI,SK,TR	CZ,LT NL,SK	AT,CH CZ,DE	AT,BE,CH CZ,DE,ES FR,GB,IE IT,NL,PT SK,TR
Gas Category »		**$I2_H$**	**$I2_E$**	**$I2_{E+}$**	**I2ELL**	**$I2_L$ / $I2_{EK}$**	**$I3_{B/P}$**	**$I3_P$**	**$I3_P$**	**I3+**
	Unit	**G20**	**G20**	**G20/G25**	**G20/G25**	**G25/G25,3**	**G30/G31**	**G30**	**G31**	**G30/G31**
Supply pressure	mbar	20	20	20 / 25	20	25	30	50	28 - 30/37	30
Burner pressure	mbar	12,7	12,7	12,7 / 15,5	12,7	15,5	23	23	23	23
Gross input	kW	10	10	10 / 9,1	10,0	9,1	10,2	10,2	10,2	10,2
Net input	kW	9	9	9 / 8,2	9,0	8,2	9	9	9	9
max. Heat output	kW	7,8	7,8	7,8 / 7	7,8	7	7,9	7,9	7,9	7,9
min. Heat output	kW	2,6	2,6	2,6 / 2,3	2,6	2,3	2,6	2,6	2,6	2,6
(Max.) Gas usage	m^3/hr	1,01	1,01	1,01 / 1,06	1,009	1,06	0,22	0,22	0,22	0,22
	kg/hr	0,71	0,71	0,71 / 0,78	0,71 / 0,78	0,78	0,40	0,40	0,40	0,40
NOx	mg/kWh_{input}	<100					<100			
Pilot		446,0330,14					446,0330,07			
Burnerinjection		140 (Main), 2x 280 (log)					1x 80 (Main), 2x 120 (log)			

Type of flue C11 / C31 / C91

Additional electricity use

• At rated heat output	el_{max}	9^{-5}	kW
• With minimal heat emission	el_{min}	9^{-5}	kW
• In stand-by mode	el_{sb}	9^{-5}	kW

Power requirement for the permanent pilot light

Power requirement for the permanent pilot light (requirements applicable)	P_{pilot}	Does not apply

Efficiency (NCV)

• Efficiency at rated heat output	$\eta_{th, nom}$	88	%
• Efficiency at min. heat output (indicative)	$\eta_{th, min}$	58	%

Type of heat release / control room temperature (Select one)

- With electronic control of the room temperature plus week switch

Other control options

- Control of the room temperature with presence detection
- Control the room temperature with open window detection
- With the option of remote control
- With adaptive control of the start
- With limitation of the operating time

Glass size

• Front	450 x701 x 4 mm
• Side	450 x 242 x 4 mm

G ECODESIGN

Since 1 January 2018 every fireplace has been provided with an eco-label which is always supplied with the fireplace. The ecolabel shows which category the fireplace belongs to.

G.A ECOLABELS

The ecolabels for the different types of gas are indicated below, respectively G20, G25 and G30.

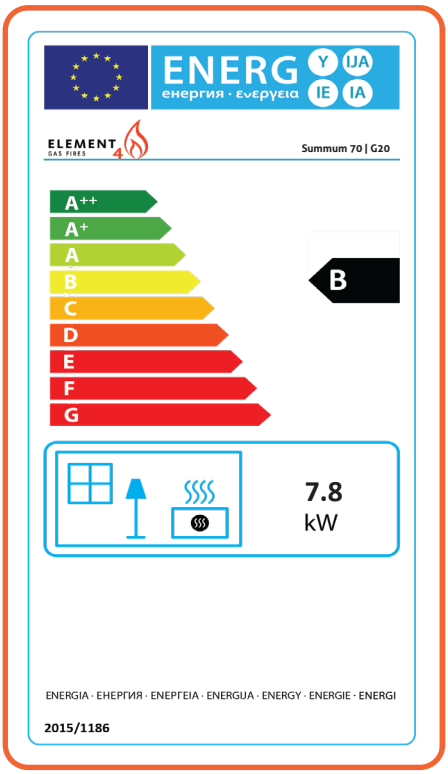

Figure G.A | Ecolabel G20

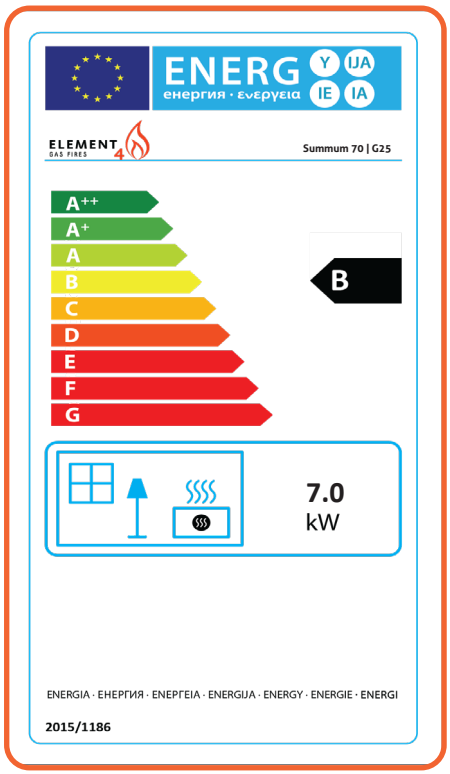

Figure G.B | Ecolabel G25

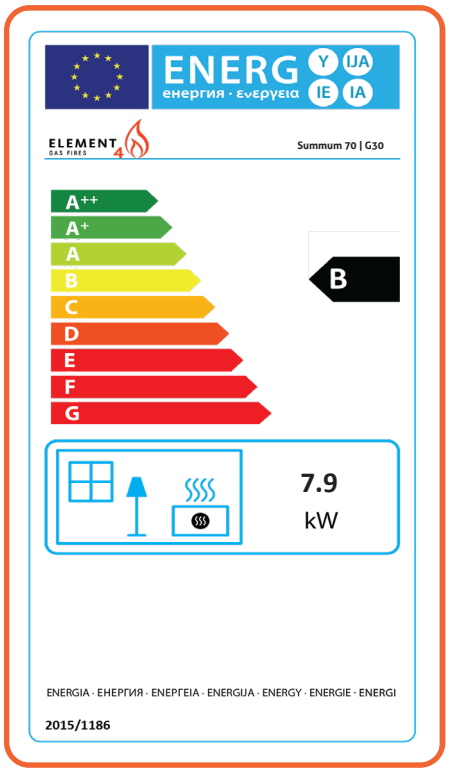

Figure G.C | Ecolabel G30

H DIMENSIONAL DRAWINGS

On this page you will find the dimensional drawings of the Fireplace with some of the important dimensions that you have to take into account when installing and installing your fireplace.

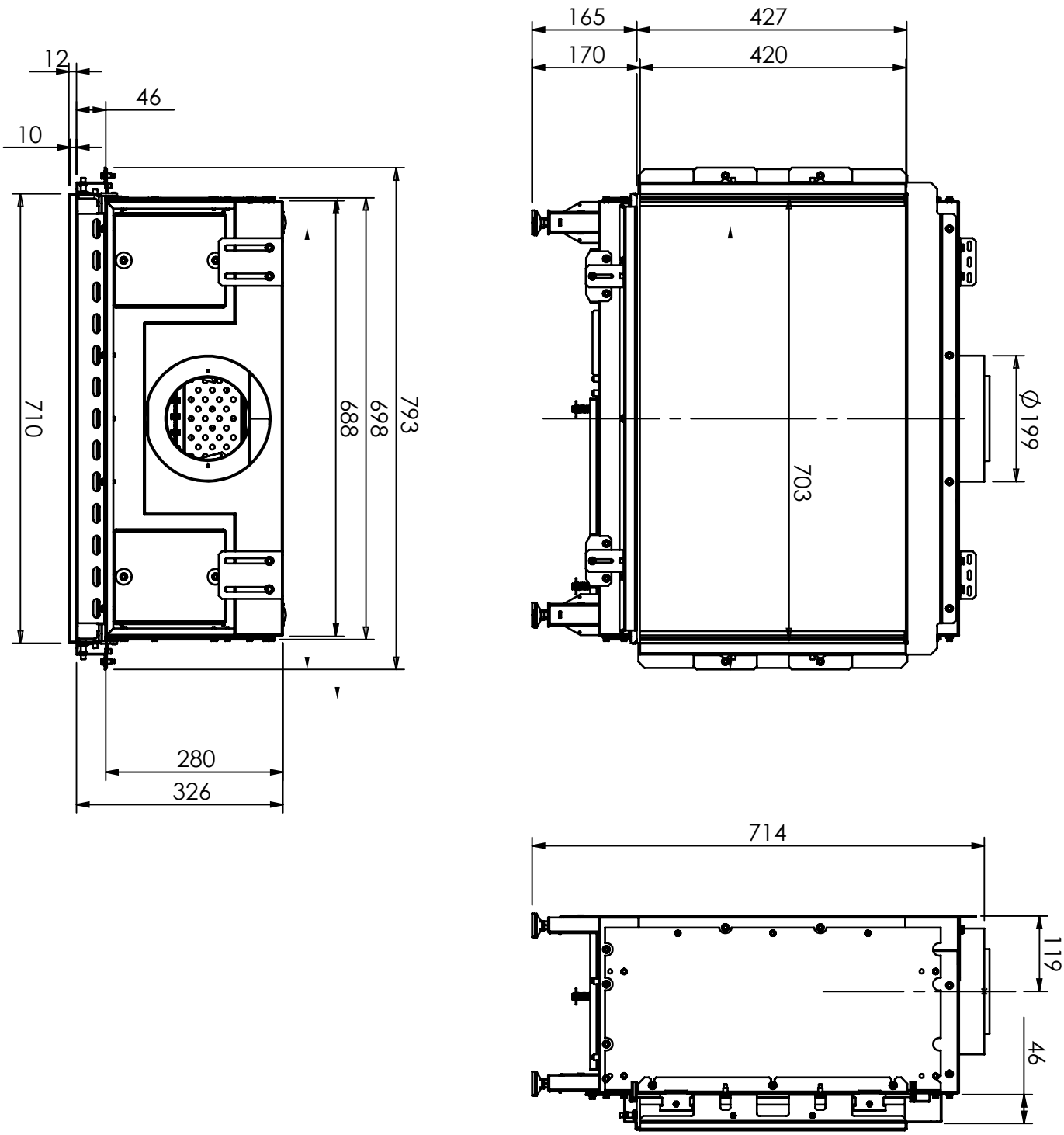

Figure H.A | Dimensional drawing of the Summum 70 F

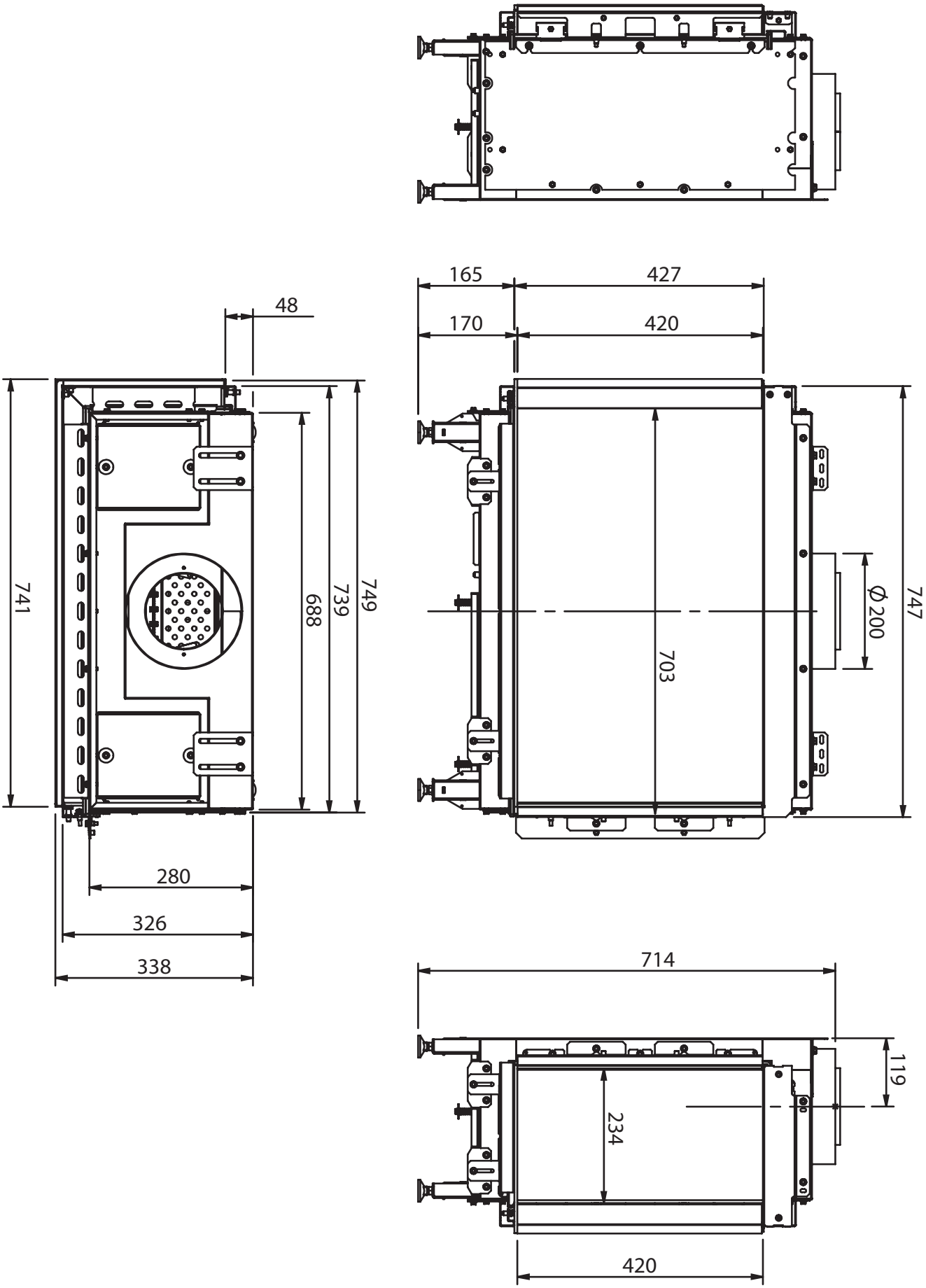

Figure H.B | Dimensional drawing of the Summum 70 C

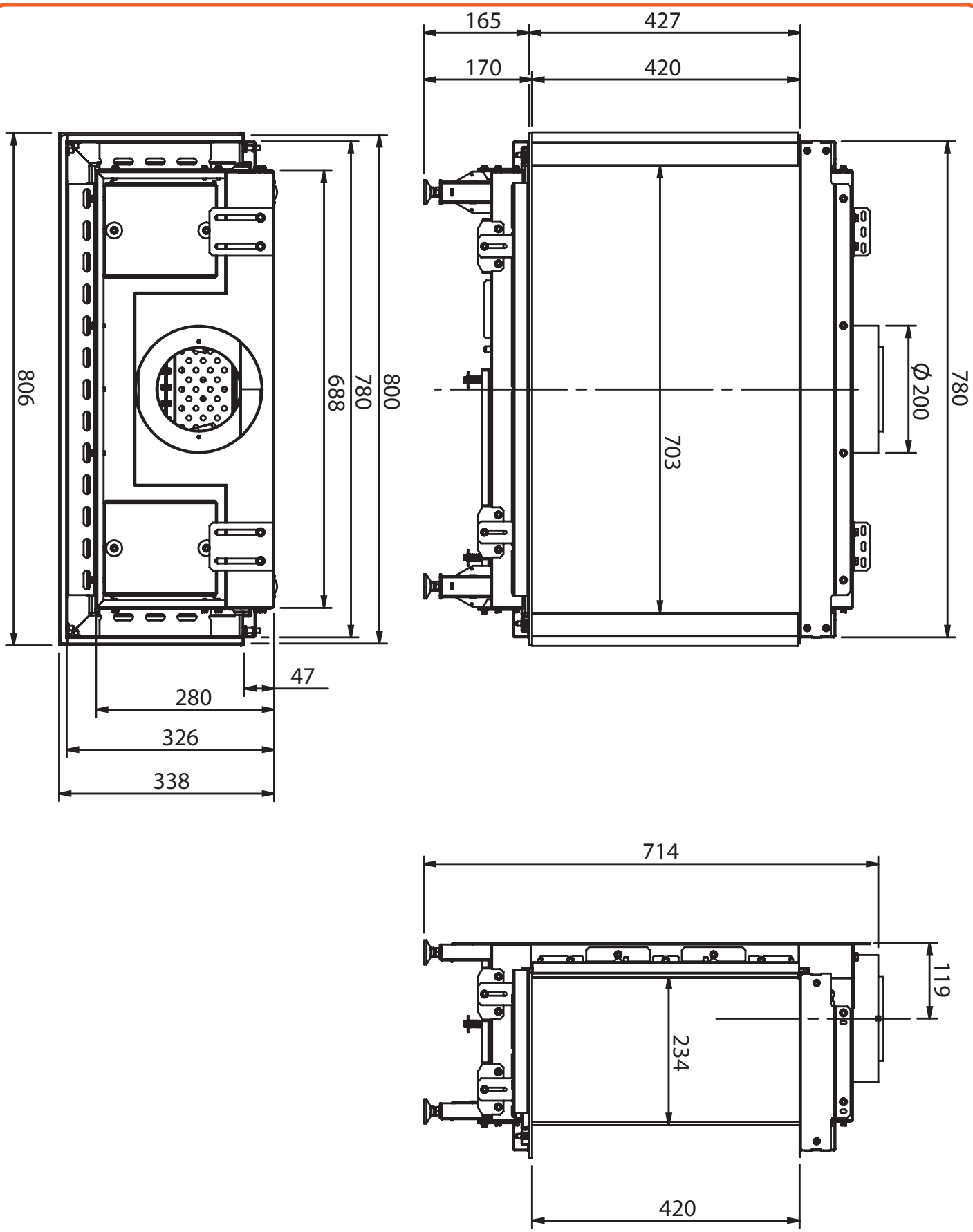

Figure H.C | Dimensional drawing of the Summum 70 3S

ELEMENT 4
GAS FIRES

Design & Assembly by:

ELEMENT 4 B.V.

Info@element4.nl

www.element4.nl

RELEASE DATE | 24/05/22